Speed Control of Wind Turbine by Using PID Controller

Furat A. Abbas*, Mohammed Abdulla Abdulsada* & Fathi R. Abusief *

Received on: 16/8/2009
Accepted on: 2/9/2010

Abstract

In this paper, the output frequency of a self excited induction generator (SEIG) driven by wind turbine and supplies static load are controlled. The principle connections of wind energy conversion are presented. The dynamic modeling of the wind turbine and its linearization are derived. The PID controller which employed for turbine rotor speed control and hence the frequency regulation is proposed. The block diagram of the proposed speed control system which consists of speed controller, actuator model and the turbine linearized model is simulated by Matlab-Simulink software package.

Keywords: Wind Turbine, Speed Control, PID Controller, Wind Generating System.

السيطرة على سرعة توربين مدار بالرياح بواسطة المتحكم الثلاثي (تناسبي+ تكاملي+ تفاضلي)

الخلاصة

تم في البحث السيطرة على سرعة وتردد مولد حثي ذو إثارة ذاتية والمدار بواسطة توربين مدار بالرياح والذي يجهز حمل مستقر . تم مناقشة طرق ربط نظام التوليد بطاقة الرياح. تم اشتقاق النموذج الديناميكي والمعادلات الخطية للتوربين .تم بناء نموذج للتحكم بسرعة وتردد التوربين ,النموذج يتضمن المتحكم الثلاثي (PID) والمشغل الآلي والنموذج الخطي للتوربين .ثم رسم المخطط الكتلي وتمثيل ومحاكاة النموذج الكلي بالحاسوب باستخدام برنامج الماتلاب .

Nomenclature

U: Output pitch angle (Degree).
J_t: Wind turbine moment of inertia (kg.m^2).
B: Turbine blade angle (Degree).
λ: Turbine tip speed ratio.
Vw: Wind speed.
ρ: Air density (Kg/m^2).
C_T: Torque coefficient.
C_p: Power coefficient.
R: Radius of area swept by the turbine bladed (m).
A: Swept area of wind turbine (m^2).
T_m: Prime mover input torque (N.m.).
P_m: Wind turbine output power (Watt).
Km: Motor gain operator (volt/rad/sec).
τm: Motor time constant (sec).
ω_t : The angular shaft speed.
ζ,γ,δ : Linearization coefficients.

Introduction

As energy demands around the world increase, the need for a renewable energy sources that will not harm the environment has been

* Electrical Engineering Department, Faculty of Engineering, University of Omar Al-Mukhtar / Libya

increased. Some projections indicate that the global energy demand will almost triple by 2050. Renewable energy sources currently supply somewhere between 15% and 20% of total world energy demand [1]. Wind energy conversion is a fast-growing interdisciplinary field that encompasses many different branches of engineering and science. According to the American Wind Energy Association, the installed capacity of wind grew at an average rate of 29% per year [2]. At the end of 2009, the worldwide installed capacity of wind energy was over 159 MW. The prediction capacity for 2010 is over 203 MW [3].The wind energy market has grown because of the environmental advantages of harnessing a clean and inexhaustible energy source and because of the economic incentives supplied by several governments [4].However, there are still many unsolved challenges in expanding wind power. The standard controls as well as recently developed advanced controls for variable-speed, horizontal axis wind turbines have been investigated [5].

Most of the wind turbines are equipped with self-excited induction generators (SEIG). They are simple and rugged in construction and offer impressive efficiency under varying operating conditions. Induction machines are relatively inexpensive and require minimum maintenance and care. Characteristics of these generators like the over speed capability make them suitable for wind turbine application [6].Recent advancements in Power Electronics have made it possible to regulate the SEIG in many ways, which has resulted in an increased interest in the use of SEIG for small scale power generation with wind power [7].

In the last years Matlab-Simulink has become the most used software for modeling and simulation of dynamic systems. Wind turbine systems are an example of such dynamic systems, containing subsystems with different ranges of the time constants: wind, turbine, generator, power electronics, transformer and grid [8].

There are two principle-connections of wind energy conversion. The first one is connecting the wind-generator to grid at grid frequency. While connected to grid, grid supplies the reactive VAR required for the induction machines. Often, a DC-link is required to interface the wind-generator system with a certain control technique to the utility grid. The second is connecting the wind-generator system to isolated load in remote areas [9].

The terminal frequency of a SEIG connected to an isolated load depends mainly on the rotor speed. So, a constant rotor speed brings a constant terminal frequency. The rotor speed of the SEIG is adjusted by regulating the speed of the wind turbine. In this paper, a turbine blade pitch control has been assumed for this purpose. The PID controller which employed for turbine rotor speed control and hence the frequency regulation is proposed and simulated by Matlab-Simulink software package.

Dynamic Modeling of the Wind Turbine [10]

The wind turbine is characterized by no dimensional curves of the power coefficient C_p as a function of both the tip speed ratio, λ and the blade pitch angle, B. In order to fully utilize the available wind energy, the value of λ should be maintained at its optimum value. Therefore, the power coefficient corresponding to that value will become maximum also.

The tip speed ratio λ can be defined as the ratio of the angular rotor speed of the wind turbine to the linear wind speed at the tip of the blades. It can be expressed as follows:

$$\lambda = \omega_t R / V_W \quad \text{... (1)}$$

Where R is the wind turbine rotor radius, Vm is the wind speed and ωt is the mechanical angular rotor speed of the wind turbine.

The output power of the wind turbine, can be calculated from the following equation

$$P_m = \frac{1}{2}\rho A C_p V_W^3 \quad \text{... (2)}$$

Where (ρ) is the air density, and (A) is the swept area by the blades, and

$$C_p = (0.44 - 0.0167\beta)\sin\frac{\pi(\lambda-3)}{15-0.3\beta} - 0.00184(\lambda-3)\beta \quad \text{....(3)}$$

Also, the torque available from the wind turbine can be expressed as:

$$T_m = \frac{1}{2}\rho A R C_T V_W^2 \quad \text{... (4)}$$

Where C_T is the torque coefficient which is given by $C_T = C_p / \lambda$

Then, the aerodynamic torque, T_m can be written as follows

$$T_m = 0.5\rho A\left[(0.44 - 0.0167\beta)\sin\frac{\pi\left(\frac{\omega_t R}{V_W} - 3\right)}{15-0.3\beta} - 0.00184\left(\frac{\omega_t R}{V_W} - 3\right)\beta\right]\frac{V_W^3}{\omega_t} \quad \text{... (5)}$$

The fundamental dynamics of the variable-speed wind turbine are captured with the following simple mathematical model:

$$J_t \dot{\omega}_t = T_W - T_m \quad \text{... (6)}$$

The moment of inertia of the turbine rotor is represented by J_t; $\dot{\omega}_t$ is the angular shaft speed; T_m is the mechanical torque necessary to turn the generator and is assumed constant value commanded by the generator. Because the generator moment of inertia of a direct-drive turbine is generally several orders of magnitude less than J_t, it has been neglected. The aerodynamic torque has been described previously by equation (5).

Dynamic Model Linearization [11]

A traditional approach to design commonly used linear controllers such as proportional-integral-derivative (PID) requires that the non-linear turbine dynamics be linearized about a specified operating point.

Linearization of the turbine equation (6) would yield:

$$J_t \Delta\dot{\omega}_t = \gamma\Delta\omega_t + \xi\Delta V_W + \delta\Delta\beta \quad \text{... (7)}$$

Where the linearization coefficients are given by:

$$\gamma = \left.\frac{\partial T_m}{\partial \omega_t}\right|_{op} = \left.\frac{\partial}{\partial \omega_t}(J_t\,\dot{\omega}_t)\right|_{OP} = \frac{1}{2}\rho A V_{wop}^3 \left.\frac{\partial}{\partial \omega_t}\left[\frac{C_p(\lambda,\beta)}{\omega_t}\right]\right|_{OP} = \left.\frac{\partial T_m}{\partial \omega_t}\right|_{op} = K_{11} + K_{12} + K_{13} \quad \text{... (8)}$$

$$\xi = \frac{\partial T_m}{\partial V_w}\bigg|_{op} = \frac{\partial}{\partial V_w}(J_t\,\dot{\omega}_t)\bigg|_{op} = \frac{1}{2}\rho A \frac{1}{\omega_{top}}\frac{\partial}{\partial V_w}\left[C_p(\lambda,\beta)*V_w^3\right]\bigg|_{op} = \frac{\partial T_m}{\partial V_w}\bigg|_{op} = K_{21}+K_{22}+K_{23}$$

... (9)

$$\delta = \frac{\partial T_m}{\partial \beta}\bigg|_{op} = \frac{\partial}{\partial \beta}(J_t\,\dot{\omega}_t)\bigg|_{op} = \frac{1}{2}\rho A \frac{V_{wop}^3}{\omega_{top}}\frac{\partial}{\partial \beta}\left[C_p(\lambda,\beta)\right]\bigg|_{op} = \frac{\partial T_m}{\partial \beta}\bigg|_{op} = K_{31}+K_{32}+K_{33}$$

... (10)

Where

$$\lambda_{op} = \frac{R\omega_{top}}{V_{wop}}$$

$$K = \frac{1}{2}\rho A R$$

K_{11}, K_{12}, K_{13}, K_{21}, K_{22}, K_{23}, K_{31}, K_{32}, K_{33} are written in appendix.

Here, $\Delta\omega$, ΔV_w, and $\Delta\beta$ represent deviations from the chosen operating point, ω_{tOP}, V_{WOP}, and β_{OP}.

Selection of the operating point is critical to preserving aerodynamic stability in this system. The rotational speed operating point, ω_{tOP}, was selected to be the desired constant speed of the turbine, 450 rpm (47.1 rad/sec). The blade-pitch and wind speed operating points were selected as ($\beta_{op} = 9^0$ and V_{wop} = 6.4 m/s).

After Laplace Transformation equation (7) becomes:

$$J_t s\Delta\omega_t = \xi\Delta V_w(s) + \gamma\Delta\omega_t + \delta\Delta U(s)$$

... (11)

Let $D = \frac{\gamma}{J_t}$

The turbine rotor shaft speed can be represented as

$$\Delta\omega_t = \left[\frac{\xi}{J_t}\Delta V_w(s) + \frac{\delta}{J_t}\Delta U(s)\right]\frac{1}{s-D}$$

... (12)

Equation (12) describes the linearized model of the wind turbine. Such model is represented by the block diagram shown in Fig. (1).

Model of Actuator

The permanent magnet DC motor is used as an actuator turbine blade adjustment, which may be represented by the block diagram shown in Fig.(2) where Ua(s) and Uo(s) are the Laplace transform of the pitch angle input and output respectively, Km is the gain constant, and τm is the time constant of the permanent magnet DC motor.

Speed Controller using PID

The PID-controller is used for controlling the rotor speed. Such controller is illustrated in Fig. (3), where $\Delta\omega_t(s)$ represents the input rotor speed (error signal), and $\Delta U_c(s)$ represents the output pitch angle change.

The transfer function between the input rotor speed and the output pitch angle change can be described as follows:

$$C(s) = \frac{\Delta U_c(s)}{\Delta\omega_t(s)} = \frac{K_p s + K_i + K_d s^2}{s}$$

... (13)

Complete Speed Control System

The proposed wind-turbine speed control, shown in Fig. (4), is simulated by Matlab-Simulink software package.

The systematic approach to PID controller design provides a means of visually observing the effect of gain changes on the Root Mean Square (RMS) speed error [10].So in order to assess controller performance, the root mean square of the error between the actual rotational speed and the desired rotational speed indicates the capability of the controller to reject the wind speed fluctuations.

The simulation was used repeatedly. Each of the gains was varied over a wide region. Observation of the system response inputs provides direction in choosing gain values.

The PID controller parameters are tuned according this approach to give the optimal performance: K_P = 15, K_i = 20 and K_d = 0.1. The wind speed is changed between 4.7 m/s to 8.1 m/s. In response, the control system will exhibits a corresponding change in blade angle between 5 deg. to 15 deg. in order to keep the rotor speed constant at the reference value 47.1 rad/s, as shown in Fig. (5).

Conclusions

In this paper, the output voltage frequency of SEIG driven by wind turbine and supplies static load is controlled. Frequency regulation has been presented in this paper via controlling the rotor speed. A PID controller is employed for turbine rotor speed control and hence the frequency regulation. The proposed wind-turbine speed control is simulated by Matlab-Simulink software package. The PID controller parameters are tuned to give the optimal performance: K_P = 15, K_i = 20, and K_d = 0.1. The wind speed is changed between 4.7 m/s to 8.1 m/s. In response, the control system will exhibits a corresponding change in blade angle between 5 deg. to 15 deg. in order to keep the rotor speed constant at the reference value 47.1 rad/s.

References

[1] H. H. El-Tamaly and Adel A. Elbaset Mohammed, “Modeling and Simulation of Photovoltaic/Wind Hybrid Electric Power System Interconnected with Electrical Utility ", 12th International Middle-East Power System Conference, MEPCON 2008, pp 645-649, 2008.

[2] L. Y. Pao and K. E. Johnson, “A Tutorial on the Dynamics and Control of Wind Turbines and Wind Farms,” Proc. Amer. Ctrl. Conf., June 2009.

[3] World Wind Energy Association, World wind energy installed capacity. http://www.wwindea.org, Accessed April / 1 / 2010.

[4] Editor: K. Heinloth, " Energy Technologies Sub volume C: Renewable Energy", Springer-Verlag Berlin Heidelberg, 2006.

[5] Jason H. Laks et. al., " Control of Wind Turbines: Past, Present, and Future", 2009 American Control Conference, June 10-12, 2009, St. Louis, Missouri, USA. http://ecee.colorado.edu/~pao/anonftp/LaksPaoWright_ACC09.pdf

[6] Sathyajith Mathew, "Wind Energy Fundamentals, Resource Analysis and Economics", Springer-Verlag Berlin Heidelberg, 2006.

[7] Raja Singh Khela et. al., "Application of Artificial Neural Network for Analysis of Self-Excited Induction Generator", Journal of Computer Science and

Technology (JCS&T) Vol. 6, No. 2, PP 73-79, October 2006.

[8] Florin Iov et. al.," Wind Turbine Blockset in Matlab/Simulink", UNI.PRINT Aalborg University, Denmark, March 2004.

[9] Ezzeldin. S. Abdin and X. Wilson, "Control design and dynamic performance analysis of a wind turbine-induction generator unit" IEEE Trans. On Energy Conversion, Vol. 15, No. 1, pp 91-96, March 2000.

[10] Maureen Hand, "Variable-Speed Wind Turbine Controller Systematic Design Methodology: A Comparison of Non-Linear and Linear Model-Based Designs," NREL Report No. TP-500-25540, National Renewable Energy Laboratory, July 1999.

[11] R. M. Hilloowala, "Control and interface of renewable energy systems", Ph. D. Thesis, The University of New Brunswick, Canada, 1992.

Appendix

Results of Linearization of the Wind Turbine Equation

$$K_{11} = \left\{ \frac{KV_{wop}^3}{R\omega_{Top}} \left(0.44 - 0.0167\ \beta_{op}\right) * \frac{\pi R}{V_{wop}(15 - 0.3\beta_{op})} * \cos\left[\pi\left(\frac{\lambda_{op} - 3}{15 - 0.3\beta_{op}}\right)\right] \right\}$$

$$K_{12} = -\frac{KV_{wop}^3}{R\omega_{Top}^2} * \left(0.44 - 0.0167\ \beta_{op}\right) * \sin\left[\pi\left(\frac{\lambda_{op} - 3}{15 - 0.3\beta_{op}}\right)\right]$$

$$K_{13} = -0.00184 * \left(\beta_{op} V_{wop}^2 + \frac{3\beta V_{wop}^3}{R\omega_{Top}^2}\right) K$$

$$K_{21} = \left(0.44 - 0.0167 * \beta_{op}\right) * \left(\frac{3KV_{wop}^2}{R\omega_{Top}}\right) * \sin\left(\frac{\pi(\lambda_{op} - 3)}{15 - 0.3\,\beta_{op}}\right)$$

$$K_{22} = -\left(0.44 - 0.0167 * \beta_{op}\right) * \left(\frac{KV_{wop}^3}{R\omega_{Top}}\right) * \left(\frac{\pi\lambda_{op}}{V_{wop}^2\left(15 - 0.3\ \beta_{op}\right)}\right) * \cos\left(\frac{\pi\left(\lambda_{op} - 3\right)}{15 - 0.3\ \beta_{op}}\right)$$

$$K_{23} = -0.00184\, K\left(2V_{wop}\,\beta_{op} - \frac{9\beta_{op}V_{wop}}{\lambda_{op}}\right)$$

$$K_{31} = -\frac{0.0167\, KV_{wop}^2}{\lambda_{op}} * \sin\left[\pi\left(\frac{\lambda_{op} - 3}{15 - 0.3\beta_{op}}\right)\right]$$

$$K_{32} = \frac{0.0167\, KV_{wop}^2}{\lambda_{op}} * \left(0.44 - 0.0167\,\beta_{op}\right) * \left(0.3\pi\left(\frac{\lambda_{op} - 3}{(15 - 0.3\beta_{op})^2}\right)\right) * \cos\left[\pi\left(\frac{\lambda_{op} - 3}{15 - 0.3\beta_{op}}\right)\right]$$

$$K_{33} = -\frac{-0.00184\, K(\lambda_{op} - 3)V_{wop}^2}{\lambda_{op}}$$

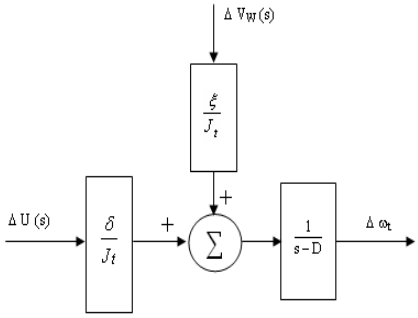

Figure (1): Block diagram of the Linear turbine plant model.

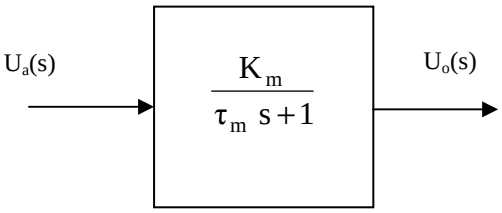

Figure (2) Block diagram of the actuator

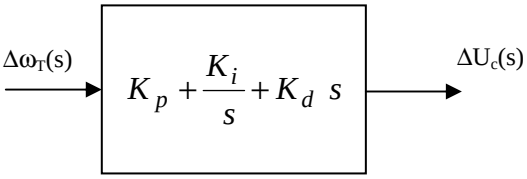

Figure (3): Block diagram of the speed controller

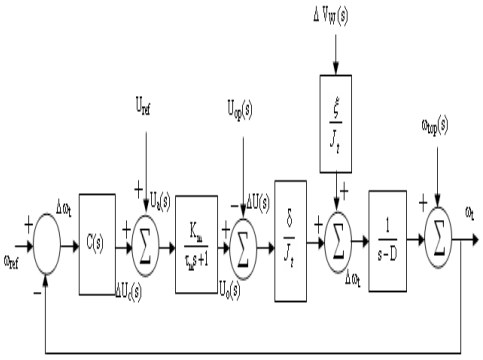

Figure (4): Block diagram of the wind turbine speed control system

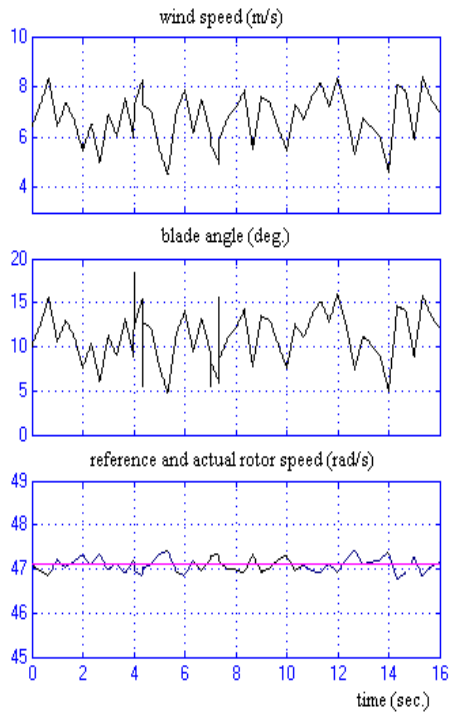

Figure (5): Time series traces of turbine Performance using PID-controller