M.G. Albarazanjy
Petroleum Technology Dept.,
University of Technology,
Baghdad, Iraq
M_albarazanjy@yahoo.com

Received on: 25/08/2016
Accepted on: 19/01/2017

Treatment of Wastewater from Oil Refinery by Adsorption on Fluidized Bed of Stem Date

Abstract-*A fluidized–bed adsorbed system was used to study the removal efficiency of oil and the total dissolved solids (TDS) from on oily wastewater. Adsorption was developed using stem date. The range of oil concentration used was (100-500ppm), and the range of [TDS] was (600 ~ 1500 ppm). The effects of flow rate at (18 ~ 28 L/min), particle size of stem date (3-5 mm) and bed height (25-40 cm) on the adsorption efficiency of removal were studied. The results showed that the removal efficiency reaches high percent about (71%) with decreasing particle size, volumetric flow rate and increasing bed height and initial oil concentration contained in treated wastewater.*

Keywords- *wastewater, refinery, adsorption, stem date, fluidized bed, treatment*

How to cite this article: M.G. Albarazanjy "Treatment of Wastewater from Oil Refinery by Adsorption on Fluidized Bed of Stem Date," *Engineering and Technology Journal*, Vol. 35, Part A, No. 2, pp. 134-138, 2017.

1. Introduction

Discharge of wastewater from oil refineries usually contains fats, oil and greases [FOG'S] and suspended solids to sewerage system is regulated by most treatment plants [1]. The control technology for oil, fat and grease removal varies in complexity, although the basis processes involve the collection and recovery of valuable oils, solids and removal of undesirable pollutants before discharge to a receiving system. Removal of [FOG'S] and solids depends on the condition of the oil – water mixture and the type of equipment's used, which must be carefully, selected [2].

The type of oil – water mixture of oil and greases is classified as free oil, dispersed oil and emulsified (dissolved) oil. Free oil usually characterized by an oil- water mixture with droplets greater than or equal 150 microns in size while dispersed oil mixture has a droplet size range (20 ~ 150 microns), and an emulsified oil mixture will have droplet sizes smaller than 20 microns (the particle size would be typically less than 5 microns) [3]. Soluble oils can be comprised of materials such as phenolic–type aromatic compounds, which are selectively extracted to a varying degree**.**

Techniques that have effect on the removal efficiency [4].

Settling: The treating of settler vessel usually provides sufficient time of quiet residence to allow the water to settle. Moreover, sand filter contributed in decreasing the concentration of pollutant in the effluent treated wastewater from 112 ppm to 79.5 ppm. Also sand filter contributed with low level in decreasing BOD and COD concentration from 49pmm to 39ppm and from 115pmm to 106.25pmm respectively [5].

Agitation: Agitation is needed to intimately mix the demulsified with emulsion solid to promote collision of water drops and coalescence after the emulsifier film is disrupted.

Heat: Most plants use heat in treating process, since it provides an aid to mixing coalescing and settling – Reducing viscosity of oil, weakening or rupturing the film between oil and water and Altering the difference in density of fluids.

Electricity: Frequently used in place of heat as and-aid treating process. The effect of oxidation and reduction process on organic matters by electro flotation, electro coagulation.., etc., in current study have higher removal efficiency of oil and total dissolved solid form wastewater in refinery and petrochemical industry [6].

The adsorbed from solution in fluidized bed is usually expressed as a function of volume giving a breakthrough curve. The time for breakthrough appearance and shape of the breakthrough appearance curve are very important characteristics for determine the operation and the dynamic response of an adsorption column [7].

Theory: To limit the reducing pressure and head loss build up in the deep beds and to overcome the problem of the stem date bed, partially fluidized-bed adsorbed was used. The wastewater is produced at the bottom of the column and the bed was allowed to expand such as fluidized–bed expands [8]. The fluidized beds offer a high available surface area. Since there is no contact between bed and particles. Segregation of adsorbent particles occurs in the fluidized–bed adsorbed.

Another factor, which reduces the adsorption process efficiency of, is back mixing which obviously occurs

Copyright © 2017 by UOT, IRAQ

in both of the solid and liquid phase depending on the liquid Reynold's number [9].
The description of mass transfer process in column of fluidized–bed Intreparticle mass transfer such pellets can be controlled either by macro pore diffusion or by micro pore diffusion or by both mechanisms [10].

2. Materials and Samples Preparation

The adsorbent, which is stem date, was chosen because of its low cost and available in Iraq. Most Stem Date past in has three parts Figure 1:

- Mcoullary Rays
- Pith
- Cork epidermis

These portions have bulk density of approximately 430 kg /m3 Products made from the woody ring (Mcoullary Rays) portion are referred as made from Pith and Mcoullary Rays are natural, biodegradable and renewable (Table 1).

I. Preparation of stem date

Particles of date palm tree trunk was obtained by cutting and crushing of dry stem date and separated from its mcoullary rays and pith sieved to produce a particle size (3, 4 and 5 mm). The stem date washed with distilled water to reduce the residues content, then dried at (100–125 °C) for 12 hours and stored in desiccators at the room temperature.

II.Preparation of samples

Oil–water samples were collected from wastewater treatment plant of Al-Doura refinery in Baghdad. After analyzing the wastewater samples collected from locations after and before API separates unit, the main constituents of the analysis were obtained as shown in Table 2.

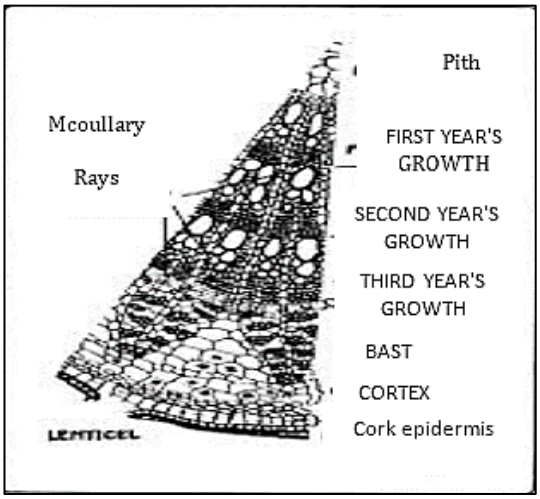

Figure 1: Stem date parts

Table 1: Properties of prepared stem date particle

Item	Dim.
Dimensions	3.6~4.4,5.2 mm
Bulk density	430 kg/ m^3
Void fraction of bed	0.52
Surface area	$900*10^3$ m^2/kg
Particle density	$1.28\ 10^3$ kg/ m^3

Table 2: Wastewater discharged from Al-Doura refinery

Item	Unit	Before API	After API
Suspended solids	ppm	500-1000	75-145
Oil	ppm	1000-1500	50~100
BOD	ppm	150~250	150~750
COD	ppm	320-1150	320-1150
Phenols	ppm	0.74	<0.74
Sulphides	ppm	3.2	≤2.5

III. Experimental part

***Apparatus**:* A schematic diagram of experimental apparatus as a small-scale pilot plant of fluidized – bed absorber constructed to determine the column characteristics of adsorption is shown in Figure 2.
Test procedure: All experiments the mass of stem date was placed in column with diameter of 10 cm and height 50 cm adsorption bed heights from (25 ~ 40 cm).The pressure drop across the column was measured by pressure gauge. Tests were carried out by flowing the oil/ water emulsion from a container to adsorption column through flow meter by pump to allow controlling the flow rate by ball valve. Tests were ended when effluent break through took place, due to oil saturation of the bed when the pressure at the inlet rise up to 6 bar. Oil concentration in wastewater samples was measured by spectrophotometer (UV-160A) according to ASTM 1788-14.

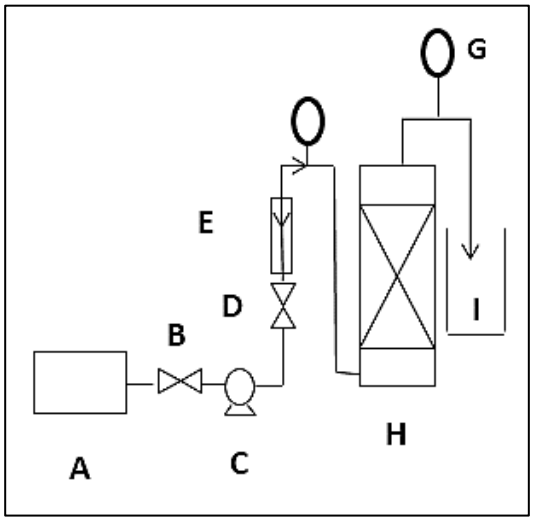

Figure 2: schematic diagram of experimental apparatus
A: Feed tank, B. D: Valve, C: Pump gauge, E: Flow meter, H: Fluidized bed–column, I: Output tank, F.G: Pressure

3. Results and Discussion

Tables 3, show the results of the removal efficiency for different oil concentrations in the feed solution as a function of major design parameters. These parameters include bed height, volumetric flow rate and particles size of stem date. Then study is director to these variables with total dissolved solids (TDS).The results show how oil removal efficiency affected by these variables.

To study the effect of volumetric flow rate on adsorption ability of stem date many experiments were conducted at constant bed height (40 cm), with initial oil concentration of (100 PPM), and particle size 3 mm

It is obvious from Figure 3 that increasing of flow rate decreases the ability of stem date to subtract oil droplets. It also reduces the removal efficiency. The explanation may due to generation of large size oil droplets, which trapped in the void space and residence in these spaces, which cause increase in velocity of liquid phase and a decrease in the resistance to mass transfer, and increases the transfer rate weakening the driving forces of disperse phase.

Figure 4, shows the curves obtained for different bed heights by increasing the amount of stem date with constant volumetric flow rate at 18 L/min and constant particle size of (3 mm).

It is obvious that increasing bed height increases the ability of stem date to treat a larger volume of contaminate solution. This is due to increasing of residence time of emulsion in the column, which resulted from increasing of bed porosity, and increasing of surface area.

Varying the particle size is another important effect, which can be investigated. The experiment curves are presented in Figure 5, for different particle sizes (3, 4 and 5 mm) with initial oil concentration of (100PPM) and constant flow rate of (18 L/min) and constant bed height of (40 cm)

It is obvious that the smaller size of particles showed a higher oil removal efficiency than the other sizes, this is due to elimination of inter particle mass transfer resistance and large surface area of a smaller size particles.

Figure 6, shows the curve obtained at different total dissolved solids with initial solids concentration of (600 PPM) and removal efficiency at constant flow rate of 18 L/min, bed height of 40 cm and constant particle size of 3 mm.

It is obvious that initial solids concentration increases the residual solids and hence decreases solids removal efficiency, This is attributed to the decrease in surface area of stem date because of increasing the amount of solids adsorbed per unit weight of stem date.

It is obvious that initial solids concentration increases the residual solids and hence decreases solids removal efficiency, This is attributed to the decrease in surface area of stem date because of increasing the amount of solids adsorbed per unit weight of stem date.

Table 3: Variation of flow rate with oil conc.= 100 ppm, bet heights 40 and P.S= 3 mm

Flow rate 18 L/min		Flow rate 21 L/min		Flow rate 24 L/min		Flow rate 27 L/min	
Co ppm	R=$\frac{Co-Ci}{Co}$	Co ppm	R=$\frac{Co-Ci}{Co}$	Co ppm	R=$\frac{Co-Ci}{Co}$	Co ppm	R=$\frac{Co-Ci}{Co}$
100	20	100	18	100	14	100	12
200	25	200	22	200	20	200	17
300	37	300	34	300	30	300	23
400	46	400	39	400	35	400	30
500	57	500	51	500	44	500	33

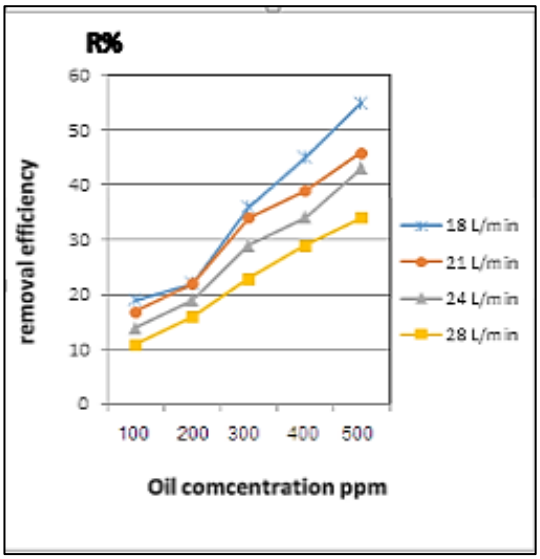

Figure 3: Shows the effect of variation of flow rate on removal efficiency at (H= 40 cm, particle size= 3 mm, Oil conc.= 100 ppm as in Table 3

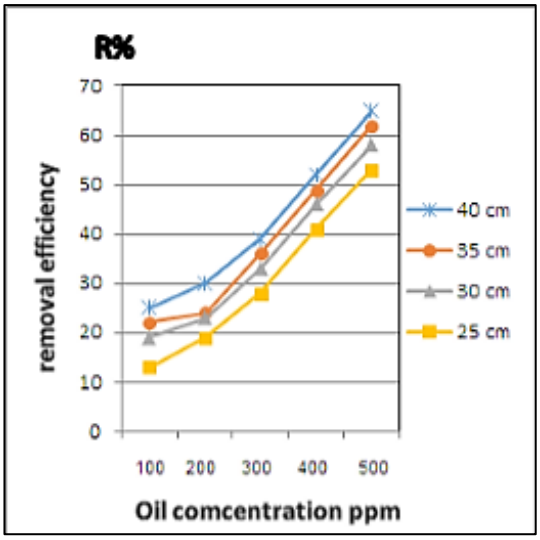

Figure 4: The effect of variation of bed height on oil removal efficiency at constant particle size of 3 mm and flow rate of 18 L/min as in Table 4

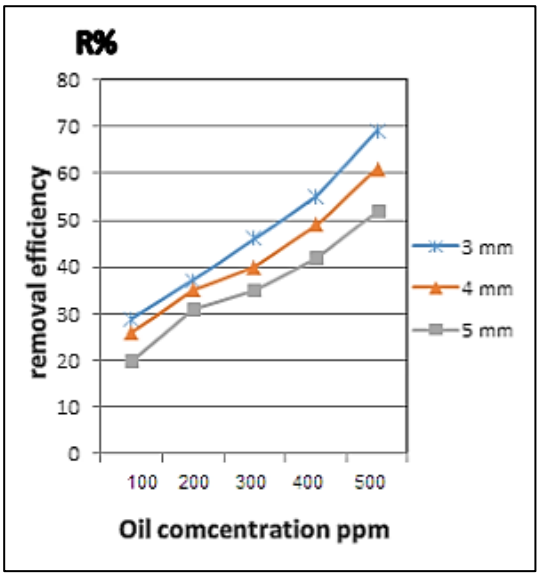

Figure 5: the effect of variation of particle size on oil removal efficiency with constant bed height of 40 cm and flow rate of 18 L/min as in Table 5

4. Conclusion

The following conclusion are obtained on basis of experiments on oil removal efficiency and Total Dissolved Solids (TDS) by a fluidized bed system under varying condition of initial oil content, bed height, flow rate and particle size:

1. Stem date has considerable adsorption for oil droplets and total dissolved solids TDS in wastewater.
2. Oil removal efficiency reaches increases with increasing bed height.
3. Removal efficiency of oil and TDS increases with decreasing of initial oil and solids concentration, particle size and flow rate.

Table 4: Variation bed height with Co= 100 ppm, flow rate= 18 L/min and particle size= 3 mm

Bed high 40 cm		Bed high 30 cm		Bed high 25 cm		Bed high 20 cm	
Co PPM	$\%R=\frac{Co-Ci}{Co}$	Co PPM	$\%R=\frac{Co-Ci}{Co}$	Co PPM	$R=\frac{Co-Ci}{Co}$	Co PPM	$\%R=\frac{Co-Ci}{Co}$
100	26	100	24	100	20		14
200	35	200	26	200	24		19
300	49	300	34	300	37		24
400	57	400	50	400	47		41
500	66	500	62	500	58		53

Table 5: Variation particle size with Co= 100 PPM bed heights 40 cm and flow rate= 18 L/min

Particle size= 3 mm		Particle size= 4 mm		Particle size= 5 mm	
Co PPM	$\%R=\frac{Co-Ci}{Co}$	Co PPM	$\%R=\frac{Co-Ci}{Co}$	Co PPM	$\%R=\frac{Co-Ci}{Co}$
100	30	100	27		21
200	38	200	36		33
300	47	300	41		35
400	65	400	50		42
500	71	500	61		53

Co: oil concentration, Ci: initial concentration, R: Removal efficiency

Table 6: Variation of total dissolved solids with initial concentration of total dissolved solid 600 PPM, bed height= 40 cm flow rate= 18 L/min and particle size = 3 mm

TDS PPM	%R
600	74
800	71
1000	68
1200	66
1400	63
1600	60

References

[1] M.T. Stephenson, "Component of Produced Water, A Compilation of Industry studies," J. Pet. Tech., 548-603, 1992.

[2] E.R. Alley "Water Quality Control Hand Book," Mc Craw –Hill Inc, 112-118, 2000.

[3] Z.A.K. Wojtanowic, "Oil Field Environment Control Technology," A sypsis, J. Pet. Tech., 166-172, 1992.

[4] D.L. Ramond and A.A. Charler, "Water Quality and Treatment," Mc. Craw-Hill Professional, Ch6, 5th, 1999.

[5] M. AL-Hashimi and H.T. Hussan "The Performance of Oxidation Pond for Wastewater Treatment in Rural Areas Case Study AL-Dewaniyah Prorince," *Engineering and Technology Journal,* Vol. 32. Part. A, No. 9, 2014.

[6] W.E.Jr, Wesley "Industrial Water Pollution Control," Second edition Mc Craw-Hill Inc., 1989.

[7] A.H. Mohammed, M. AL-Aini and S. AL-Khalidi "Adsorption of Coliform Bacteria from Water by Activated Carbon," *Engineering and Technology Journal*, Vol. 34, Part. A, No. 4, 2016.

[8] K.O. AL-Sayed andY. Mohammed "Treatment of Oil-Water Emulsions by Adsorption on to Deposited Carbon," Egyptian Journal of Petroleum. Vol. 27, No.7, Part A. 2011.

[9] Z.A. AL-Shamarani "Separation of Oil from Water by Dissolved Air Flotation," 2000.

[10] E.H. Zain ALbideen "Treatment of Oily Wastewater for the North Company," M.Sc. Thesis University of Technology, Iraq, p.65-68, 2003.

Biography

Mohammed Albarazanjy completed his BSc in 1999 on Chemical Engineering from University of Technology, Baghdad and his MSc in 2007 on chemical engineering/ petroleum refinery and petrochemical industrial from University of Technology, Iraq. He started his job journey as a process designer in Saad Company, Iraq. He participated in designing and building many chemical and refineries projects. He later moved on to the University of Technology, Baghdad as an assistant lecturer. He is currently the maintains manager and assistant lecturer in the Petroleum Technology Department/University of Technology, Baghdad. He has published 3 papers in respected journals