The Treatment of Grey Water by Aeration

Roa'a Mudhafar Younus
Environmental Sciences and Technology College, University of Al-Mosul/Al-Mosul
E- mail: rouaa.elhamdani@gmail.com

Received on: 7/1/2013 & Accepted on: 3/10/2013

Abstract

The present study included the use of the aeration system in the treatment of gray water. Samples were collected from three selected houses in Mosul city in 2010 for the months (March, June, September and December). Some properties of grey water have been measured including pH, EC, TSS, DO, COD, NO_3 and PO_4. The aeration process has been carried out for the gray water for a detention time of two days in order to find out the best time for the treatment.

The results indicated a large decrease in COD 55, 76 mg/l after 23 hrs of aeration in March and June, and 51 and 62 mg/l after 25 hrs of aeration in September and December respectively. The remaining properties were examined at the end of the aeration process (at 48 hrs) which were within the FAO recommendation range for using the treated gray water for agricultural purposes.

Keywords: gray water**,** aeration system, COD removal.

معالجة المياه الرمادية باستخدام التهوية

الخلاصة

تضمنت الدراسة الحالية استخدام نظام التهوية في معالجة المياه الرمادية، حيث جمعت العينات من ثلاثة منازل في مدينة الموصل خلال العام 2010 للأشهر آذار، حزيران، ايلول وكانون الأول وقيست بعض الخصائص كالرقم الهيدروجيني، التوصيلية الكهربائية، المواد العالقة الكلية، الاوكسجين المذاب، المتطلب الكيمياوي للاوكسجين، النترات والفوسفات. تم اجراء عملية تهوية للمياه الرمادية لمدة يومين ومراقبة خصائص المتطلب الكيمياوي للاوكسجين من اجل الحصول على افضل زمن لعملية المعالجة.

تبين من خلال النتائج انخفاض في تركيز المتطلب الكيمياوي للاوكسجين فكانت 55، 76 ملغم\لتر بعد 23 ساعة، و 51، 62 ملغم\ لتر بعد 25 ساعة على التهوية، أما باقي الخصائص فقد فحصت عند نهاية عملية التهوية (عند 48 ساعة) وثبت من خلال الدراسة انها تقع ضمن المحددات الموصى بها من قبل منظمة الغذاء والزراعة وبالإمكان استخدام المياه الرمادية المعالجة للأغراض الزراعية.

INTRODUCTION

Grey water is wastewater from showers, baths, taps, basins, clothes washing machines, automatic dishwashers, kitchen sinks and eventually from floor drains. It generally includes all sources of wastewater except the toilet drainage, Some authors exclude kitchen wastewater from the other grey water streams [1]. Grey water constitutes 50–80% of the total household wastewater [2].

Grey water represents the largest part of domestic wastewater, at the same time it contains only about 3 % of the nitrogen and 10 % of the phosphorus contained in the entire domestic wastewater Table (1). Contrasting to municipal effluents that could be

safely separated from industrial wastewaters which occasionally contains high loads of hazardous substances, grey water doesn't contain such substances and can be considered as a highly suitable water source. Data in Table (1) vary according to personal behavior like frequency of showering and laundry. The specific volume flow of "brown water" in Table (1). does not contain toilet flush water [3].

Table (1) Specific volume flows and its characteristics of the three partial streams of domestic wastewater [3]

Specific mass flows kg/capita/ year		Volume flows l/ c/ d		
		Grey water 25 -100	Yellow Water 500	Brown Water ~ 50
N	~ 4-5	~ 3 %	~ 87 %	~ 10 %
K	~ 1,8	~ 34 %	~ 54 %	~ 12%
P	~ 0,75	~ 10 %	~50 %	~ 40 %
COD	~ 30	~ 41 %	~ 12 %	~ 47 %

Tigris river represent the main source of life requirement in Mosul city. In the last years, water consumption increased due to population growth and migration to the city. Therefore, it is necessary to decrease water demand by applying the principles of reuse and treatment of grey water to be used for irrigation and other purposes that don't need high quality.

The system of drainage of wastewater in the houses of Mosul city separated grey water from black water, and the last is collected in the septic tanks, while the grey water flows in open channels and discharged to Tigris river in most cases.

Numerous studies have been conducted on the treatment of grey water, March et al. used a sedimentation process followed by a nylon sock type filter and then a disinfection to treat low strength bath grey water. The influent concentrations were as follows: COD 171 mg/l, turbidity 20 NTU, SS 44 mg/l and TN 11.4 mg/l, the removal efficiencies after treatment were 54 % for COD, 17.5% for turbidity, 57% for SS and 37% for TN. The researchers concluded that the reclaimed grey water can be used for toilet flushing under controlled working conditions[4].

Itayama et al. treated grey water from kitchen sink by using a slanted soil filter, the characteristics of the grey water were COD 271 mg/l, BOD 477 mg/l, SS 105mg/l, TN 20.7 mg/l and the TP 3.8 mg/l, these values were reduced to 40.6 mg/l COD, 81 mg/l BOD, 23 mg/l SS, 4.4 mg/l TN and 0.6 mg/l TP in the effluent. The conclusion was that the system is capable of removing organic pollutants and total phosphors to a certain degree[5].

Birks used Up Flow membrane treatment system to treat grey water with medium strength, the influent COD and the BOD were 451 mg/l and 274 mg/l respectively, and the effluent were COD 117 mg/l and BOD 53 mg/l[6].

Ramon et al. applied a direct nano-filtration membrane technique to treat low strength grey water. The obtained results refer to the removal of 93% organic matter[7].

Soewondo and Yulianto studied the effects of continuous and intermittent aeration on submerged aerated bio filter reactor (SAB). Three reactors were built in parallel to treat artificial grey water using sucrose ($C_{12}H_{22}O_{11}$) with concentration of

300 mg/l COD. The bio ball media was used as a support material to attach microorganisms. All reactors were operated under batch and continuous conditions. Air supply to each reactor was two hours on, two hours off, and four hours on, four hours off modes. The results showed that all the behavior of all reactors have no significant differences on removal efficiency of COD (81-87%) as well as DO concentration (4- 5 mg/l), finally ammonium removal efficiency was (33- 77%)[8].

In the United States there was a study on aeration systems which are used in water treatment facilities. The system as shown in Figure (1) begins with a settling tank, and then mixing chamber where an aerator swirls air through the waste water. The air and nutrients stimulate growth of aerobic bacteria that decompose the organic matter. Following aeration, the water flows to a clarification chamber where it can be chlorinated and filtered [9].

The aeration systems need to provide a suitable atmosphere inside the laboratory reactors to be able for microbial work. Perhaps, one of the most important of these factors is providing the appropriate mix as well as the sufficient oxygen concentration to achieve the aerobic oxidation of organic matter. In general, there are two main methods to achieve aeration and mixing: surface mechanical aeration and compressed air [10].

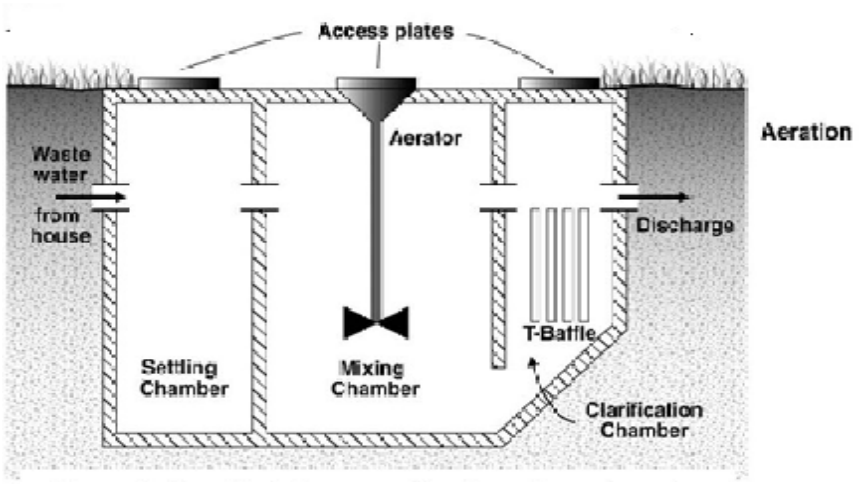

Figure (1) Simplified diagram of the domestic wastewater treatment system in the US[9]

In this research, the aeration system was applied to treat grey water from three houses in Mosul city for four months. This system was used for the first time in treating grey water to find the ability of the aeration process on treatment and using the effluent for irrigation purpose.

MATERIALS AND METHODS

The practical part of this research included three stages:

In the 1 st stage the grey water samples have been taken from three houses in Mosul city at the start of each season (March, June, September and December in 2010), to obtain a mixture to represent the content of grey water so the samples taken

from the source that symbolize the grey water with mixing percentages suggested by NSW Health Department like the contents of Table (2).

Table (2): Grey water percentage used in the mixture[11]

Grey water Type	% Total
Kitchen sink	11
Bathing	48
Clothes washing	34
Hand Basin	7

In the 2 nd stage all samples were transported to the laboratory and kept refrigerated at approximately 4°C until analyzed, then the three samples from each house had been mixed and analyzed for pH, Electrical Conductivity, Total Suspended Solid, Dissolved Oxygen, Chemical Oxygen Demand, PO_4 and NO_3. All these tests were achieved following the Standard Methods [12]. The 3 rd stage included the treatment process through a pilot plant using a batch aeration system, An identical reactor made from glass with dimensions of 30 × 30 × 30 cm was used in this study as shown in Figure (2) and (3) and had an effective volume of 25 L, The reactor contained an inclined glass plate separating it to two parts: the first for aeration and the second for settlement, so the grey water stay in this part for about half hour then the sample been taken. From a side tube four electric air compressor (RS electrical 610) were used to provide oxygen and mixing required for the work of the system. Compressed air was delivered to the aeration basin with plastic tubes leading to stone air Diffusers with a diameter 1.5cm.

It was necessary to control the temperature of grey water by a thermostat heater to raise the water temperature to 22-25° C during the months of March and December, because of low temperatures in these months.

The values of pH, EC, DO, PO_4, NO_3, TSS in the reactor were measured at the beginning and the end of the aeration process after settlement, but the COD concentrations were monitored for 48 hour.

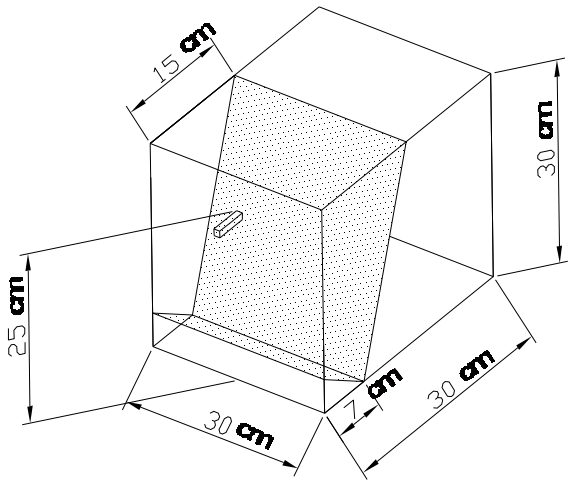

Figure (2) The reactor used in aeration process

Figure (3) Photograph of the pilot plant

Results and Discussion:

The Characteristics of grey water

Table (3) shows the characteristics of the grey water collected from the three houses after mixing. It can be observed that the grey water is of low concentrations of organic matter (COD 170- 280 mg/l) [11].

The pH value was within the alkaline range (7.25- 8.2) due to the detergents used, and the Electrical Conductivity was 650- 890 µmhos/cm due to dissolved salts. One type of salts in grey water is phosphates originating from detergents and dishwasher agents[13]. For this research the phosphates vary from 2.3- 8.9 mg/l, while the concentration of nitrate was low and ranged from 0.224- 0.41 mg/l. The total suspended solid was high 1070-1350 mg/l, this rely to the solid matter from food residue and impurities resulting from cleaning.

Table (3) The Characteristics of raw grey water from three houses after

Month	Characteristics						
	pH	EC µmohs/cm	COD mg/l	DO mg/l	NO_3 mg/l	PO_4 mg/l	TSS mg/l
March	8. 2	850	197	0.8	0.38	8.9	1070
June	8.1	890	280	0.9	0.31	3.7	1120
September	7.25	650	220	0.5	0.224	2.3	1200
December	7.28	760	170	0.4	0.41	5.4	1350
Average	7.7	787.5	216.75	0.65	0.331	5.08	1185

Table (4) comparisons among raw Grey water characteristics for this study and other studies

studies	Characteristics						
	pH	EC, µmohs/cm	COD mg/l	NO_3 mg/l	PO_4 mg/l	TSS mg/l	SS mg/l
[14]	7.19	757.85	254.82	0.31	2.36	-	171.14
[15]	-	-	839	-	-	158	-
[16]	-	-	366	0.6	6	1081	169
[17]	7.4	-	525	-	-	146	-
This study	7.7	787.5	216.75	0.331	5.08	1185	-

From the comparison made in Table (4) it can be observed that the grey water used in this study was within the characteristic of grey water in the lectures.

The treatment of grey water

After the application of aeration treatment for grey water and proceeding COD concentration for about 48 hours as shown in Figure (4). It can be noted that COD concentration was decreased with time and the minimum value reached 55, 76, 51, 62 mg/l for March, June, September and December respectively at 23- 25 hours of aeration. This decrease is due to the aerobic degradation of the organic matter by accumulation of micro- organisms. After this time the COD concentration increased due to the growing of micro- organisms also indicating high suspended solid in the treated water. The COD value stays under the Iraqi specification of waste water for disposal to the river (COD < 100 mg/l).[18]

Figure (5) indicates the efficiency removal of COD with the aeration time, it can be illustrated that the high removal efficiencies at 23 hours were 72, 72.1 % for March, June respectively and at 25 hours were 72.2, 69 % for September and December respectively.

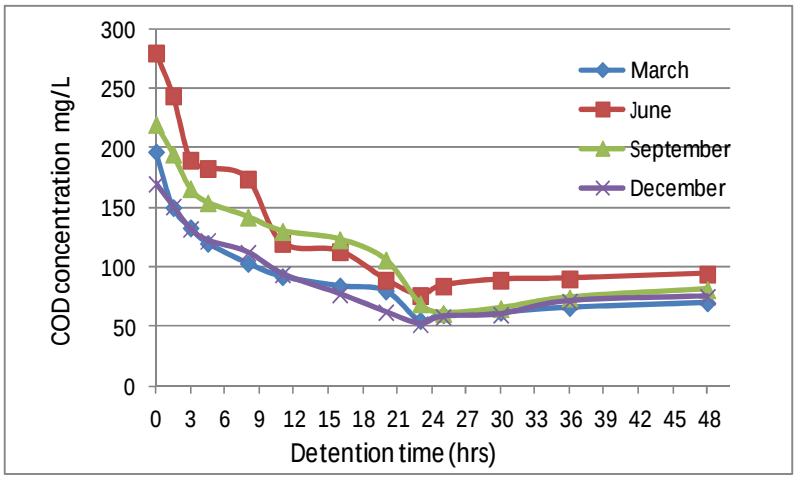

Figure (4) Concentration of COD during treatment period

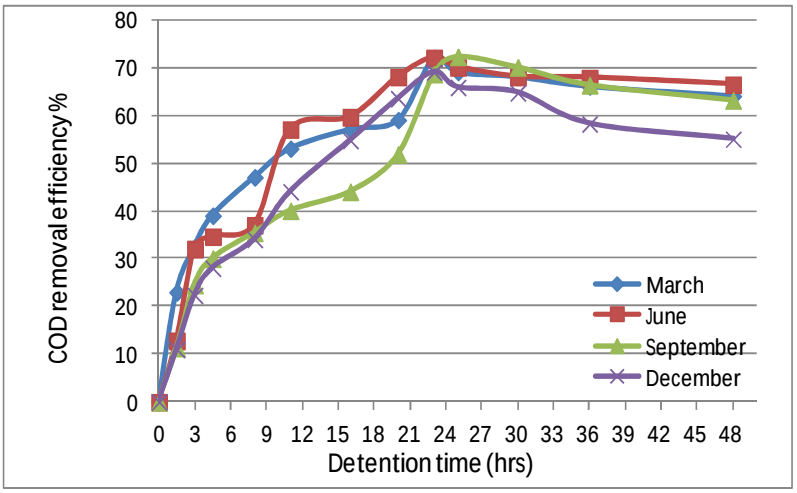

Figure (5) The efficiency removal of COD during the treatment period

Table (5) : Characteristics of grey water after 48 hr aeration

Months	Characteristics					
	pH	EC µmohs/cm	DO mg/l	NO_3 mg/l	PO_4 mg/l	TSS mg/l
March	7.8	655	5.2	0.4	1.3	600
June	8.3	750	6.3	0.61	1.2	740
September	8.11	880	4.1	0.39	2.1	780
December	8.0	930	4.6	0.52	0.4	840

Table (5) shows the values of pH, EC, DO, NO_3, PO_4 and TSS which were measured at the end of treatment for 48 hours.

It can be observed that pH values after treatment for all months ranged between (7.8- 8.3). The high value of pH in the treated water from its original value in the influent grey water is due to the generation of carbon dioxide (CO_2) which results from the oxidation of organic matter within the aeration basin (Equation 1). The dissolution of the gas in the water increases the capacity of alkalinity by generating ions bicarbonates and carbonates Equation (2) and (3). Bicarbonates ions causes the increase of pH values [19].

$$Organics + O_2 \xrightarrow{biodegradable} CO_2 + H_2O + Newcells + OtherProducts(N \ldots (1)^*$$

$$CO_2 + H_2O \longleftrightarrow H_2CO_3 \longleftrightarrow H^+ + HCO_3^- \qquad \ldots(2)^*$$

$$CO_2 + OH \longleftrightarrow HCO_3^- \longleftrightarrow H^+ + CO_3^{2-} \qquad \ldots(3)^*$$

*[20]

The Electrical Conductivity values ranged between 655- 930 µmhos/cm after the aeration treatment, according to FAO classification this is considered suitable for irrigation for plants which have slight to moderate bearing salts (from 700 to 3000 µmhos/cm) [21].

The average DO concentrations of the treated water was 4.1- 6.3 mg/l, The limiting factors for reaction in suspension reactors is to achieve DO 2-3 mg/l [10].

The increase of NO_3 concentrations after the aeration treatment (0.39- 0.61 mg/l) compared with the concentration before treatment is due to the nitrification process. The ammonia found in grey water is converted to nitrite then to nitrate in the presence of oxygen by Nitrobacteria, these bacteria grow slowly and need relatively large sludge age in order to become effective in the removal of nitrogenous compounds [22]. In the aeration system used, the amount of sludge generated is little which is the main consumer of nitrogen. The concentration of nitrate stays under the specification for irrigation water (NO_3 < 10 mg/l) [21]. PO_4 concentrations decreased to 0.4- 2.1 mg/l and this value is permissible for irrigation PO_4 < 2 mg/l [21].
Finally, TSS decrease to 600, 740, 780, 840 mg/l at the end of the aeration treatment.

CONCLUSION

1-The removal efficiency of the aeration treatment process reached 72, 72.1, 72.2, 69% for the months of March, June, September and December, respectively.
2-Results show that the best time to address the aeration process is between 20 to 25 hours, where low values of COD 55, 76, 51, 62 mg/l were obtained for March, June, September and December, respectively .
3-Aeration treatment system is not efficient in nutrient removal.
4-Gray water can be used after the aerobic treatment for agricultural purposes.

REFERENCE

[1]Wilderer P. A. "Applying sustainable water management concepts in rural and urban areas: Some thoughts about reasons, means and needs", Water Science & Technology,49, (7), pp. 7-16, 2004.
[2]Friedler E. and Hadari M. "Economic feasibility of on-site grey water reuse in multi-storey buildings", Desalination,190, (1-3), pp. 221–34, 2006.
[3]Otterpohl, R. "Black, brown, yellow, grey - the new colors of sanitation". Water Journal, 21, October, pp. 37-41, 2001.
[4]March J.G., Gual M. and Orozco F. "Experiences on grey water re-use for toilet flushing in a hotel (Mallorca Island, Spain)", Desalination, 164, (3), pp. 241–7, 2004.
[5]Itayama T., Kiji M., Suetsugu A., Tanaka N., Saito T., Iwami N., Mizuochi M. and Inamori Y. "On site experiments of the slanted soil treatment systems for domestic gray water", Water Science Technology, 53, (9), pp. 193–201, 2004.
[6]Birks, R., "Biological aerated filters and membranes for grey water treatment", M.Sc. Thesis, Cranfield University,1998.
[7]Ramon G, Green M, Semiat R, and Dosoretz C, "Low strength grey water characterization and treatment by direct membrane filtration", Desalination,170,(3), pp. 241–50, 2004.
[8]Soewondo, P., and Yulianto, A., "The effect of aeration mode on submerged aerobic bio filter reactor for grey water treatment, Journal of Applied Sciences in Environmental Sanitation, 3, (3), pp. 169-175, 2008.
[9]American Ground Water Trust, "Septic systems for waste water disposal", Consumer Awareness Information Pamphlet #4, Concord, NH. 2005.
http://www.agwt.org/septicsystems.htm (accessed April 4, 2005).

[10]Metcalf and Eddy, Inc., Wastewater Engineering Treatment /Disposal /Reuse, forth edition, *McGraw-Hill*, Inc, New York, 2003.

[11]NSW Health Department (NHD) "Grey Water Reuse in Sewered Single Domestic Premises, Management of Waste", Clause 42, selection 68, part C, April, 2000.

[12]APHA; AWWA; WPCF, Standard Methods for the Examination of water and Wastewater", 20th ed., *Am. Public Healthy Assoc.* Washington, D.C., USA, 1998.

[13]Eriksson, E., Baun, A., Henze, M. and Ledin, A. "Phytotoxicity of grey wastewater evaluated by toxicity tests", Urban Water J., 3, (1), pp. 13-20, 2006.

[14]الرحماني، نادية افرام، " استخدام المرشحات البيولوجية اللاهوائية ذات الجريان نحو الاعلى في معالجة المياه الرمادية المنزلية"، رسالة ماجستير، جامعة الموصل، كلية الهندسة، 2007.

[15]Gross A., Shmueli O., Ronen Z. and Raveh E. "Recycled vertical flow constructed wetland (RVFCW) — a novel method of recycling grey water for irrigation in small communities", Chemosphere, 66, (5), pp. 916–23, 2007.

[16]Abu Ghunmi, L., Zeeman, G., Fayyad G. and Van Lier, G.B., "Grey water treatment in a series anaerobic – Aerobic system for irrigation", Bioresource Technology, 101, pp. 41–50, 2010.

[17]Abdel Kader, A. M., "Studying the efficiency of grey water treatment by using rotating biological contactors system", Fifteenth International Water Technology Conference, Alexandria, Egypt, IWTC-15 2011.

[18]عباوي، سعاد عبد و حسن، محمد سليمان (1990) "الهندسة العملية للبيئة فحوصات الماء"، دار الحكمة للطباعة والنشر، الموصل.

[19]Eckenfelder Jr.W., Industrial Water Pollution Control, 3rd Edition, McGraw Hill International Edition, Singapore, 2000.

[20]Viessman, W. Jr. and Hammer, M. J. Water Supply and Pollution Control, Harper and Row Publishers Inc., New York, fourth edition, 1985.

[21]Food and Agriculture Organization of the United Nations (FAO), "Water Quality for Agriculture", Agriculture and Consumer Protection, Rome, Italy, 1985.

[22]Jones, R. and Lambert, R., "Evaluation of nitrification under dynamic loading conditions in an integrated fixed film activated sludge process with cord media", Water Environment Federation 70th Annual Conference & Exposition, Chicago, Illinois, October 18-22, 1997.