Experiment (5)

Lenses

Objective:-

This work is used to find the focal length of the convex lens by using two methods:

A. Direct method (auto-collimation method).

B. Graphical method (displacement method).

Apparatus:-

Bromine tungsten lamp, Convex lens (L), Illuminated object (P), Optical bench, Two axis tilt holder, Flat mirror (M).

Theory:-

A lens is a piece of glass or other transparent material shaped so that it can produce an image by refracting light that comes from an object.

Lenses are used for many purposes (in eye classes to improve vision, in cameras to record senses).

Lenses are of two kinds, converging and diverging, a converging lens is thicker in the middle than at it is; a diverging lens is thinner in the middle as shown in Fig. (1(a,b)),a converging lens brings a parallel beam of light to a single focal point (F),here F is called a real focal point because the light rays pass through it and the distance from the lens to (F) is called the focal length of the lens.

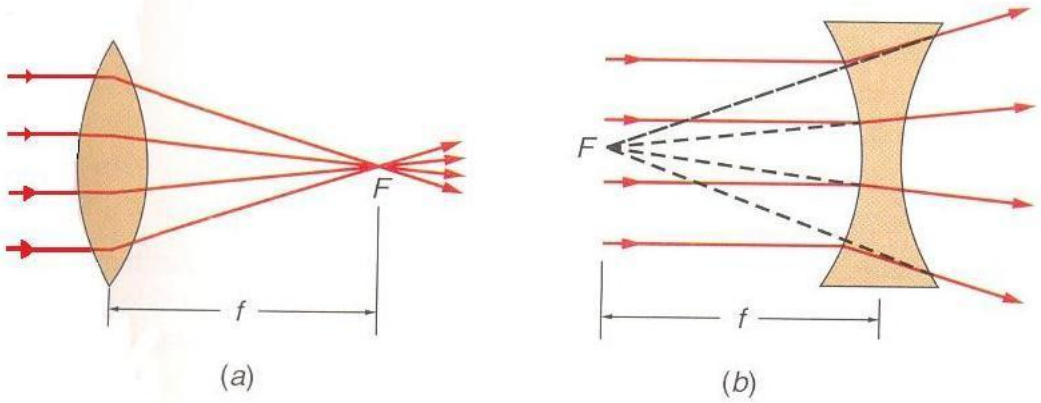

Fig. 1:- a) Convex Lens, b) Concave Lens.

Also any ray from the object is refracted by the lens would change in to a parallel ray, once reflected by the plane mirror and again refracted by the lens Shown in Fig. (2).

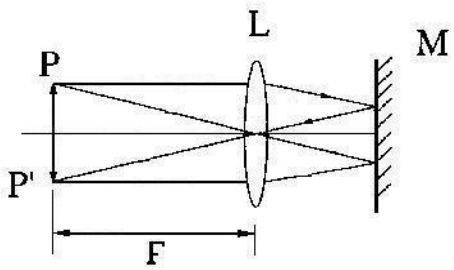

Fig.(2)

Procedure:-

A. Auto –collimation method:

To find the focal length (f) for the convex lens align all components in same height as shown in Fig. (3,4).

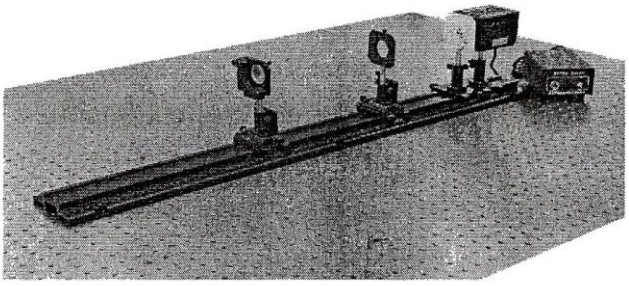

Figure 3

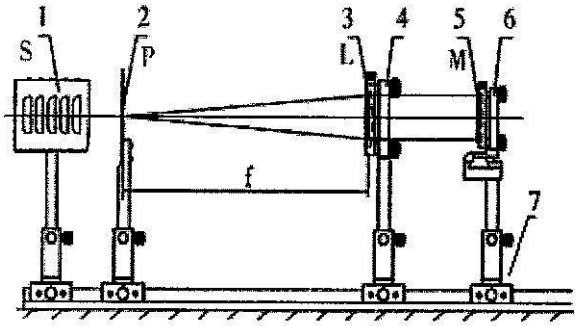

Figure 4

1. Move lens (L) back and forth till a clear image of the object on (P) is observed on the back surface of (P).
2. Adjust axis of mirror (M) and finely move (L) till the image is clearest and is the same size as the object.
3. Write down the locations of (P) and (L) as (S_1) and (S_2).
4. calculate the focal length:

$$\mathbf{f=S_2-S_1}$$

B: - Graphical method:-

1. To find the focal length (f) for the convex lens align all components in same height as shown in Fig. (5,6).

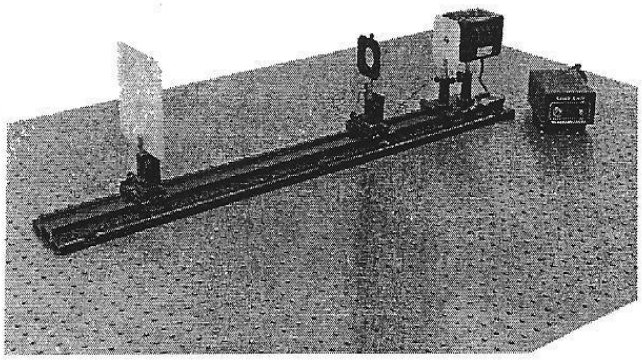

Figure 5

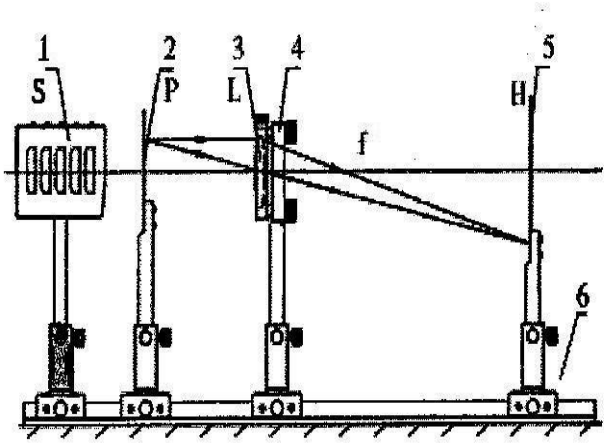

Figure 6

2. Move lens (L) back and forth till a clear image of the object on (P) is observed on the screen (H).
3. Measure the distance between the object and leans also the distance between the lens and screen (u and v respectively).
4. Move the lens to obtain another clear image and record the results.
5. Repeat step (4) for three times.
6. Arrange you results as shown in table below:

u	v	1/u	1/v	1/u+1/v=1/f

Where:

u: is the distance between the object and the lens.

v: is the distance between the image and the lens.

f: is the focal length of lens.

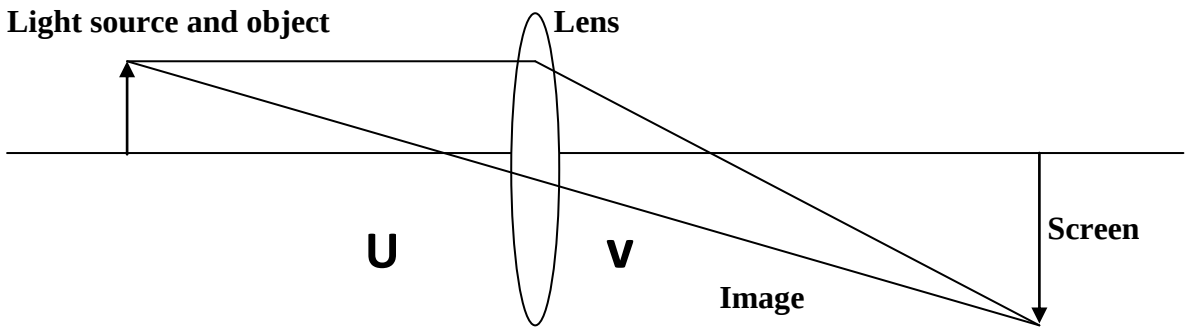

7. Plot a graph of 1/v as a function of 1/u. then find focal length (f).

Discussion:-

Q1:-which method you prefer to find the focal length? And why?

Q2:-What is the function of the convex lens in optical system.

Q3:-Explain the six cases for producing an image by convex lens.

Q4:-The near point of a certain eye is (100cm) in front the eye, what kind of lens should be used to see an object (25cm) in front of the eye?