DOPED INSULATOR LASERS (solid state lasers)

Compared to other lasers, the solid-state lasers have the following advantages:

(1) Various operation modes: The solid-state lasers can operate in CW, pulsed, Q-switched, and mode-locked modes to obtain high average power, high pulse repetition rate, high pulse energy, and high peak power. The average power of 4 kW has commercially been achieved with modular construction YAG lasers. The peak power of 10^{13} - 10^{14} W has also been obtained.

(2) Wavelength diversity: More than 100 solid-state materials can produce laser beams. Most of these beams range in the visible and near infrared regions of the electro-magnetic spectrum. The UV wavelengths have also been achieved by harmonic generators due to the advent of new non-linear materials and high beam quality obtained from diode-pumped lasers.
Significant progress has been made in the development of tunable solid-state lasers.

(3) Convenient optical delivery system: Laser beams produced by some solid-state lasers can be delivered with optical fibre, which makes lasers more flexible and applicable in dangerous or difficult-to-access processing environments.

(4) More compact and lower maintenance compared to high power CO2 lasers and excimer lasers.

Solid-State Laser Gain Media

In order for a material to be a suitable laser gain medium, it must:
1. have sharp fluorescent emission lines,
2. have strong absorption bands, and
3. have an adequate quantum efficiency for the particular fluorescent transition that is of interest .
4. The pump(i.e.,absorption) band of the gain medium falls within the emission spectrum of a pump source which is readily available.

i.Host materials

It is of utmost importance that the host material must have very good optical, mechanical and thermal properties in order to survive the harsh operating conditions of lasers. The key criteria for selecting a laser active ion host are summarized as follow

ii.Active ions

All solid state systems contain a low concentration of ions in the host that form the active LASER media.

Basic Construction of Solid-state Lasers

A typical solid-state laser usually consists of a gain medium, a pumping cavity, an optical resonator, a cooling system and a power supply . The gain medium is placed in a gold plated elliptical cross-section pumping cavity. Inside the cavity is an elliptical space with the rod (gain medium) and a flashlamp as shown in Fig. 1.

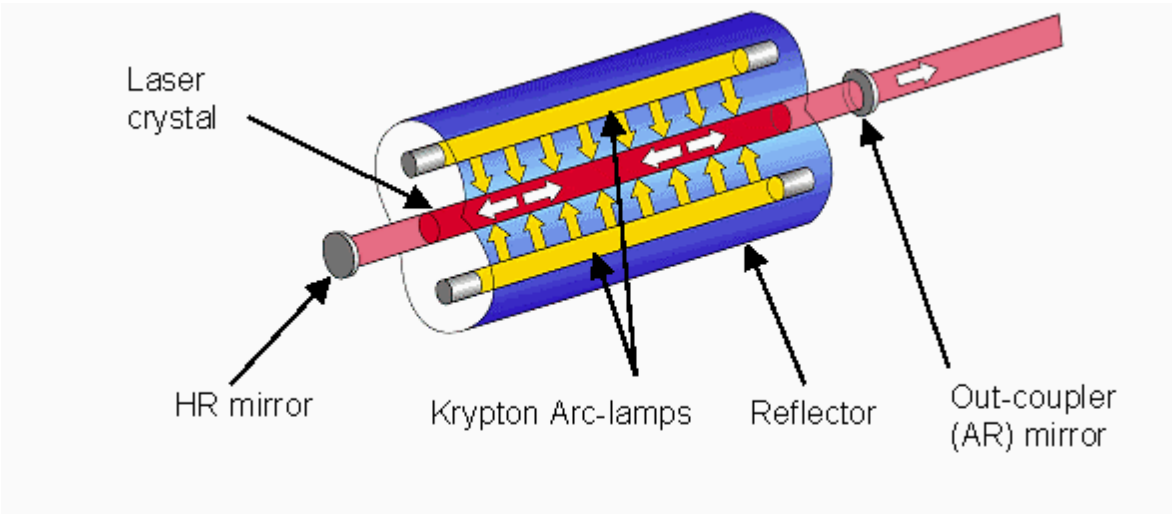

Figure 1: Major components of a resonator.

Pumping methods

Two types of electromagnetic sources are used in optical pumping:

1. Source of wide band electromagnetic spectrum- such as Flash lamps, incandescent lamps, arc lamps, etc:

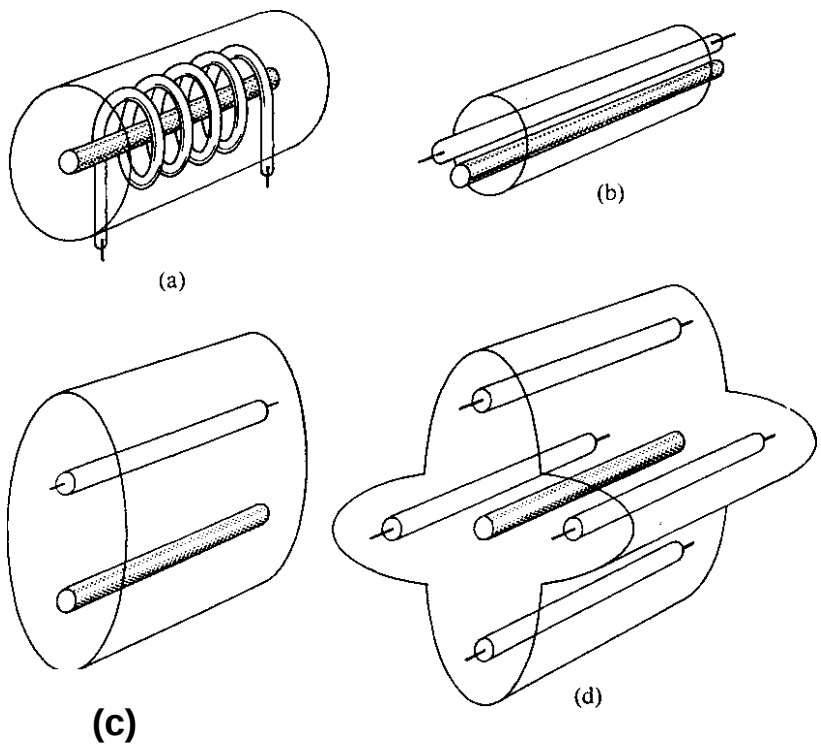

Fig. 2: Some of the more common flashtube geometries used for optical pumping: (a) a helical flashtube round the laser rod; (b) close coupling between flashtube and rod; (c) flashtube and rod along the two foci of an elliptical cavity and (d) a multi-elliptical cavity.

2. Source of narrow band electromagnetic spectrum (Diode-pumping):

Diode-pumped lasers are more efficient than lamp pumped lasers due to the fact that the diode lasers that are used for pumping have a much narrower spectral output .

Flash lamp pump and diode-pump sources can be implemented in a variety of geometries, of which only :

1. side-pump (transverse) geometry, and
2. end-pump (longitudinal) geometry,

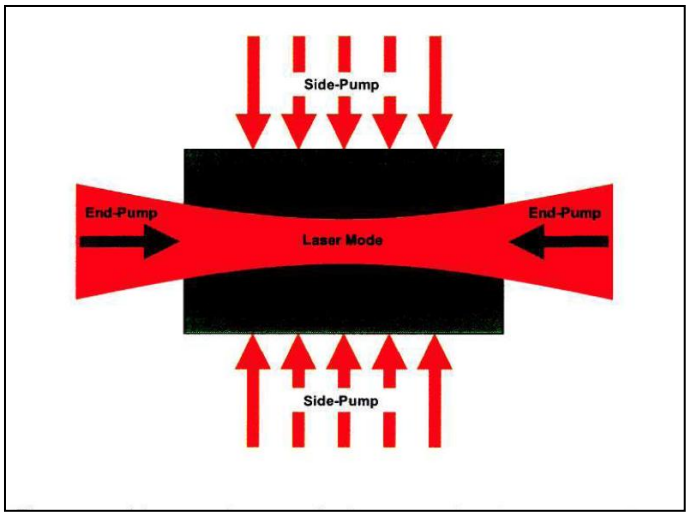

Figure 3: Schematic diagram of side-pump and end-pump geometries.

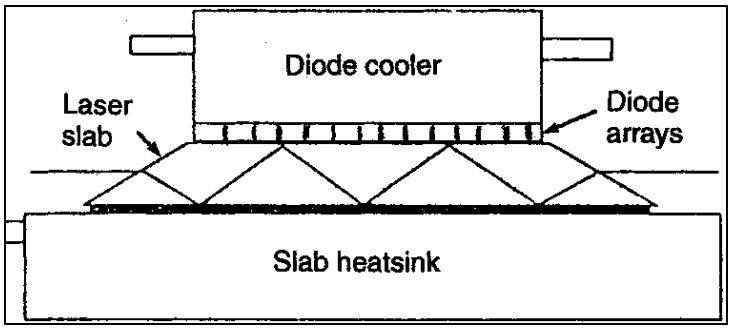

Figure 4: Side-pumped conductively cooled slab laser.

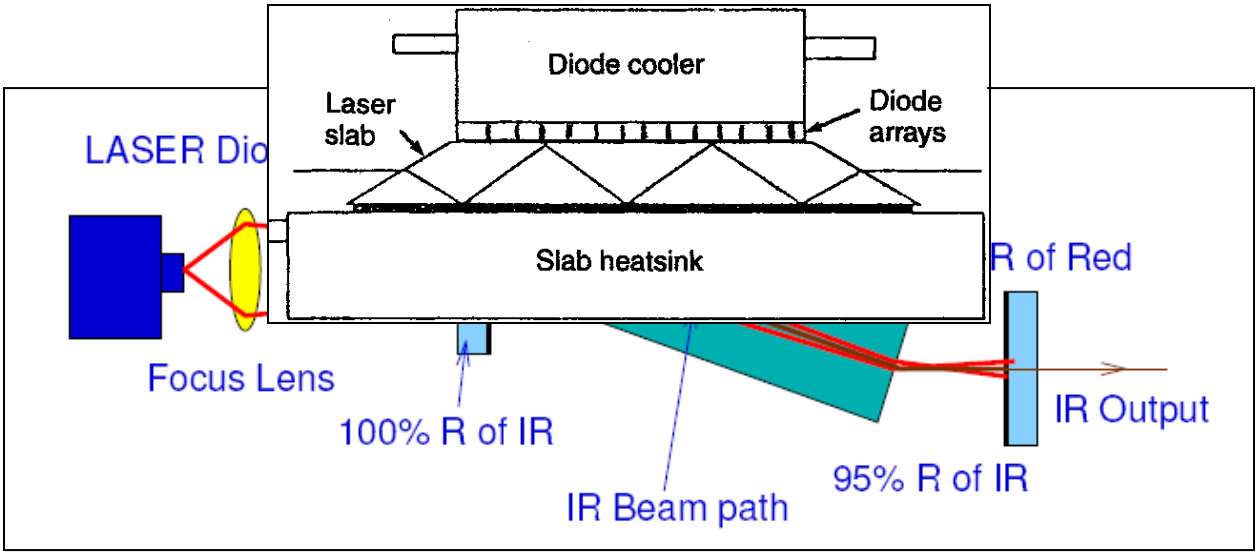

Figure 5: Typical layout of longitudinal diode pumped YAG.

Energy Transfer Processes in Solid-state Lasers

There are four processes involved during the energy transfer from electrical input to laser output, as shown in Figure 6. These four processes are:

1. conversion of electrical input delivered to the pump source to useful pump radiation.
2. transfer of the useful pump radiation emitted by the pump source to the gain medium
3. absorption of pump radiation by the gain medium and transfer of energy to the upper laser level, and
4. conversion of the upper state energy to laser output.

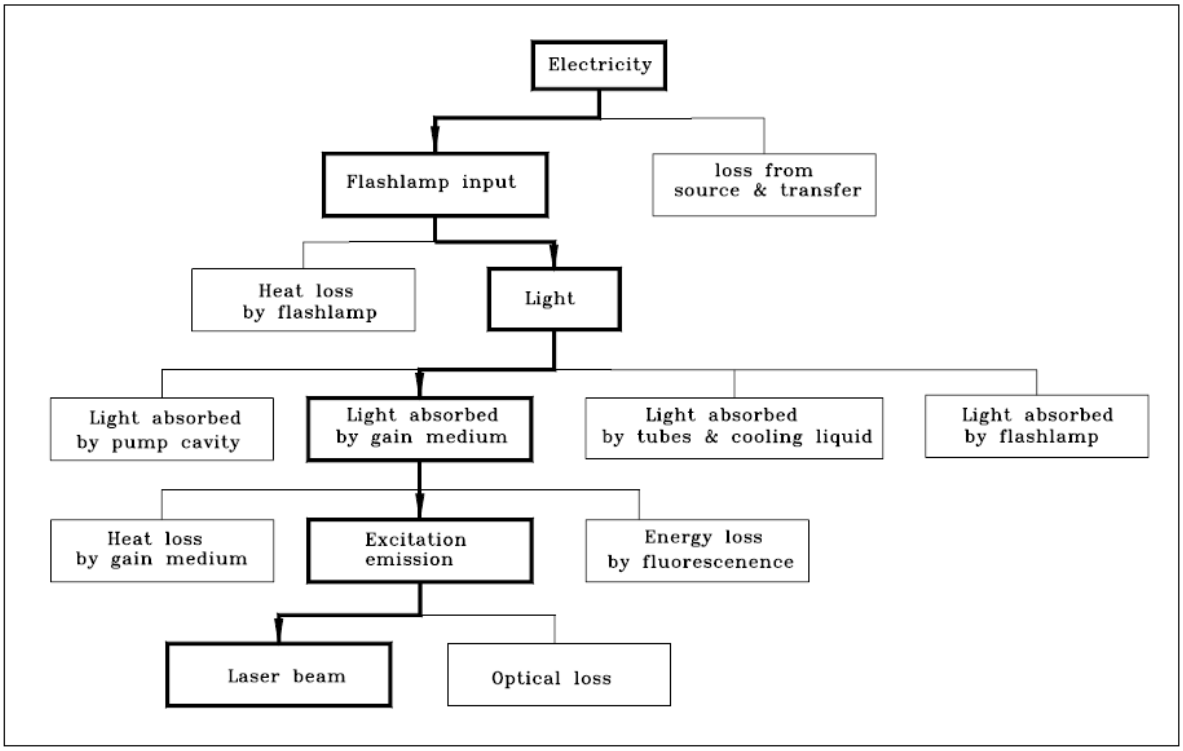

Figure 6: Schematic diagram of energy transfer in solid-state lasers.

Heat Load

The energy that is deposited into the gain medium via the optical pump and is not in turn released in the form of emission (such as fluorescence and laser emission) is converted into heat

In general one can assume a ratio of total heat load for the laser crystal to output power,

$P_h/P_{out} = 0.8 - 1.1$.

for a diode-pumped Nd :YAG laser, depending on the crystal quality and the overlap of the resonator and pump region. In flashlamp- or krypton arc lamp-pumped Nd :YAG lasers the thermal load of the crystal is about three times higher

$P_h/P_{out} = 2.5 - 3.3$.

Thermal Effects

In high power solid state lasers the maximum output power is limited by the efficiency of heat removal.

Consequences of the temperature gradient in the gain medium include :
1. laser beam distortion due to thermal lensing.
2. depolarization loss due to stress induced birefringence, and
3. ultimately fracture of the laser rod .

For example,the experimentally established fracture limit of flashlamp pumped and diode-pumped Nd:YAG rod allows up to 40W and 6OWof output power per cm of rod length, respectively. Lower temperatures and higher fracture limits can be attained by choosing a geometry of the gain medium that exhibits a larger surface to volume ratio than the cylindrical (rod) geometry.

Geometry of the active medium

1. ***Rod geometry***

   Solid-state lasers have been traditionally fabricated in the form of pencil-like rods. A rod crystal is easy to use, fabrication cost is low, and cooling water management is simple (only two O-rings are required to seal the cooling water).

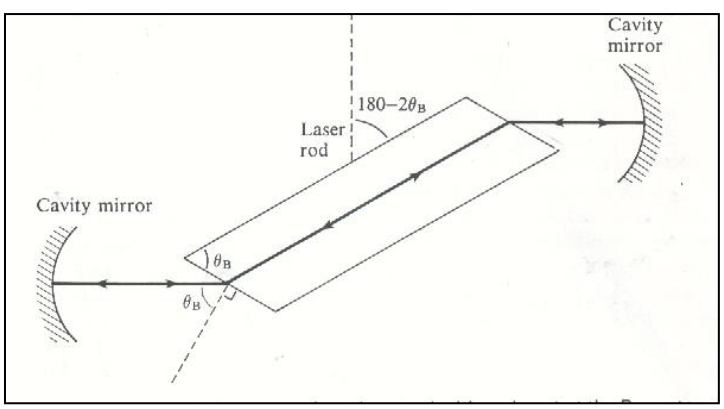

Figure 7: Laser cavity alignment using a laser rod with ends cut at the Brewster angle. With this arrangement the internal angle of the laser rod is θ_B and the rod itself is inclined at an angle of $180°–2\theta_B$ to the vertical.

2. Slab geometry

Slab-geometry solid-state lasers potentially provide significant performance improvements relative to conventional rod-geometry lasers. Compared with rod crystals, rectangular slab crystals have large cooling surfaces.

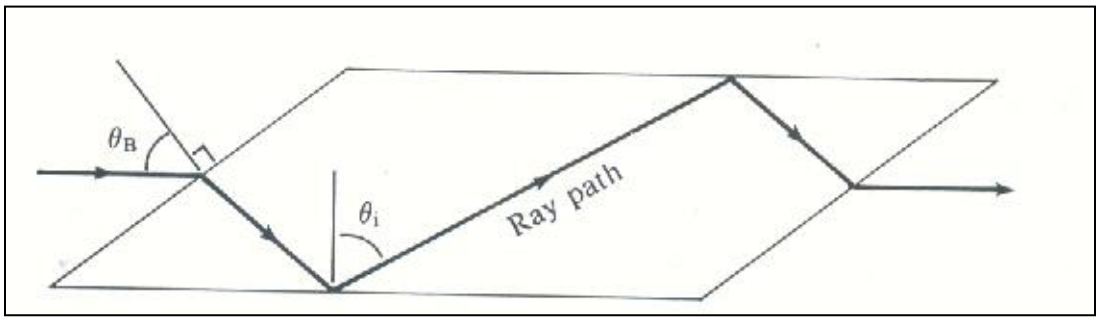

Figure 8: Ray path in a slab laser structure. Total internal reflection at the slab edges keeps the ray within the slab.

One of the main reasons for using slabs instead of rods as gain media is the fact that they have a much higher critical pump power than rods. Exactly how much harder the slab can be pumped in comparison to a rod with the same material properties, depends very strongly on the aspect ratio (w/t) of the slab as can be seen in the following equation:

$$\frac{P_c(slab)}{P_c(rod)} = \frac{3w}{2\pi t}$$

3. Disk geometry

Solid-state glass-disk amplifiers were considered very early in the development of high-brightness pulsed laser systems in order to solve problems of cooling, aperture size, gain uniformity, and pumping efficiency.

4. Annular rod (tube) geometry

Active media with a tube geometry have favorable thermal properties. A large volume of active material can be cooled efficiently through the large surface of the tube. Thus thermal stress and thermal lensing are low.

. If (a) and (b) denote the inner and outer radii of the annulus, respectively, the maximum output power P_A that can be extracted from an annular gain medium reads:

$$P_A = P_R \frac{3}{2} \frac{b+a}{b-a}$$

where P_R is the maximum output power attainable for a rod of equal length, and (b-a) is much smaller than (a). Annular gain media have been realized in dye lasers and He-Xe lasers, HF lasers, CO lasers, Nd:glass lasers, and Nd:YAG lasers. A maximum output power of 1.86kW was reported for an inside pumped Nd:YAG tube laser (tube length: 130mm, a=l7.5mm, b=26.5mm). This laser was operated at a total eficiency of 10%.

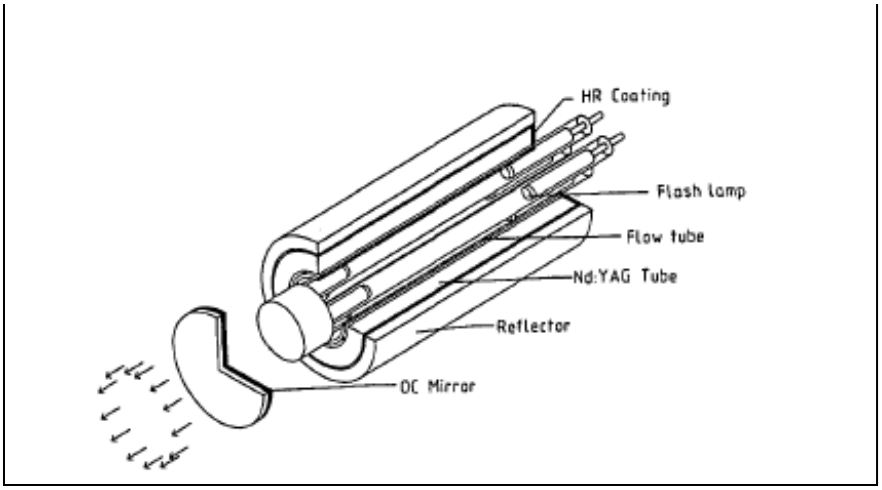

Figure 9: Inside pumped Nd:YAG tube laser .

Although the tube geometry is very well suited to provide high output powers, this

The ruby laser (Cr^{3+} : Al_2O_3)

The ruby laser is of historical interest since it was the first successful man made laser by Theodore Maiman in 1960; however, although still manufactured, it is not widely used at present. The active medium is aluminum oxide (Al_2O_3) with about 0.05% by weight of chromium as an impurity

Small Ruby rods are with diameter of about 6 mm, and length of about 7 cm. The biggest rods can be up to 20 mm in diameter, and 20 cm in length. In figure 11 a schematic description of the first Ruby laser developed by Theodore Maiman.

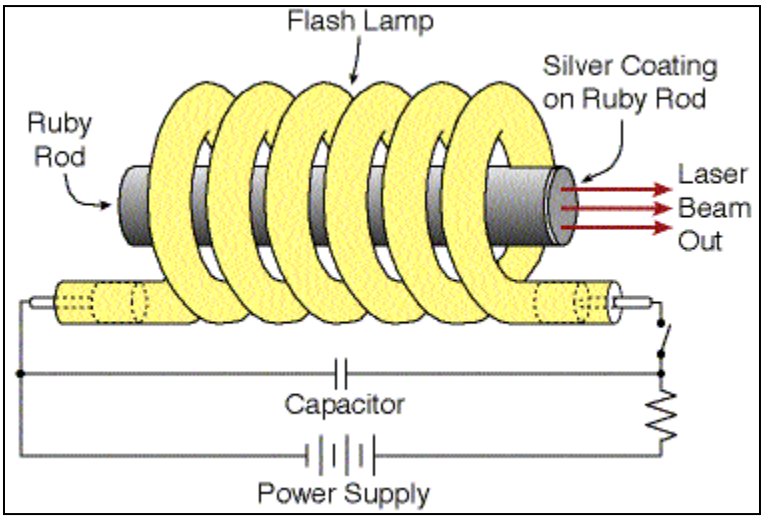

Figure 11: Schematic Description of the First Ruby Laser.

Nd Lasers

In Nd laser Nd^{+3} ions (as impurities of up to a few percent by weight) are replacing the atoms of the solid host in the active medium. Many known solid hosts are used for Nd- lasers where Nd^{+3} ions are added as impurities:

- Glass.
- YAG (Yttrium Aluminum Garnet) Crystal.
- YLF ($LiYF_4$:Yttrium Lithium Fluoride) Crystal.

. YVO4 & GdVO4 (Vanadates).

The choice between different possible hosts is according to the intended use of the laser. Glass,for example, is used as the host material when a pulsed laser is needed, with each pulse at high power, and the pulse repetition rate is slow.

Energy Level Diagram of Nd-YAG laser

Figure 12 shows the levels involved in the laser action. We see that we have essentially a four-level system with the lasing transition taking place between the ^{4}F3/2 and $^4I_{11/2}$ states. The upper laser level, $^4F_{3/2}$, has a fluorescence efficiency greater than 99.5% and a fluorescence lifetime of 230μs. The branching ratio of emission from $^4F_{3/2}$ is as follows: $^4F_{3/2} \rightarrow {}^4I_{9/2} = 0.25$, $^4F_{3/2} \rightarrow {}^4I_{11/2} = 0.60$, $^4F_{3/2} \rightarrow {}^4I_{13/2} = 0.14$, and $^4F_{3/2} \rightarrow {}^4I_{15/2} < 0.01$.

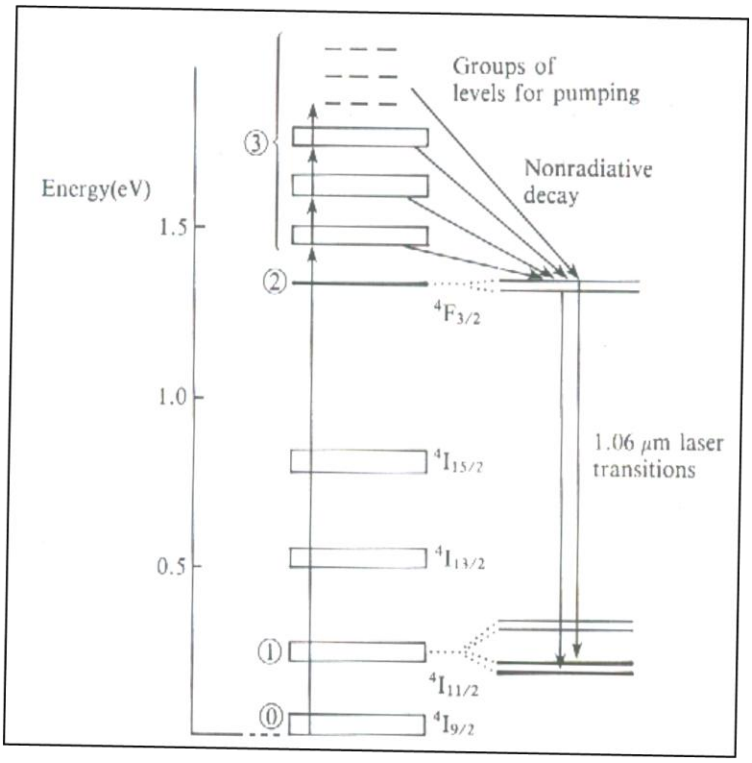

Figure 12: |Simplified energy–level diagram for the neodymium ion in YAG howing the principal laser transitions. Laser emission also results from transitions between the $^4F_{3/2}$ levels and the $^4I_{15/2}$ and $^4I_{13/2}$ levels but at only one tenth of the intensity of the transitions shown.

The Nd:YAG laser is very inefficient in the conversion of input energy to useful laser light; typically CW & pulsed Nd:YAG lasers are only approximately 2% efficient. The greatest losses are due to thermal effects and are associated with heat removal from the arc lamps and cavity. A breakdown of losses experienced by the laser system is shown in table 1 & Fig. 15.

TABLE 1 Energy transfer in a cw krypton arc lamp, pumped Nd : YAG laser.

Heat dissipation of lamps		55%
Heat dissipation of pump reflectors		30%
Power absorbed by coolant and flow tubes		7%
Heat dissipation by rod	5%	
Laser output	2%	
Fluorescence output	0.4%	
Optical losses	0.6%	
Power absorbed by laser rod		8%
Electrical input to lamps		100%

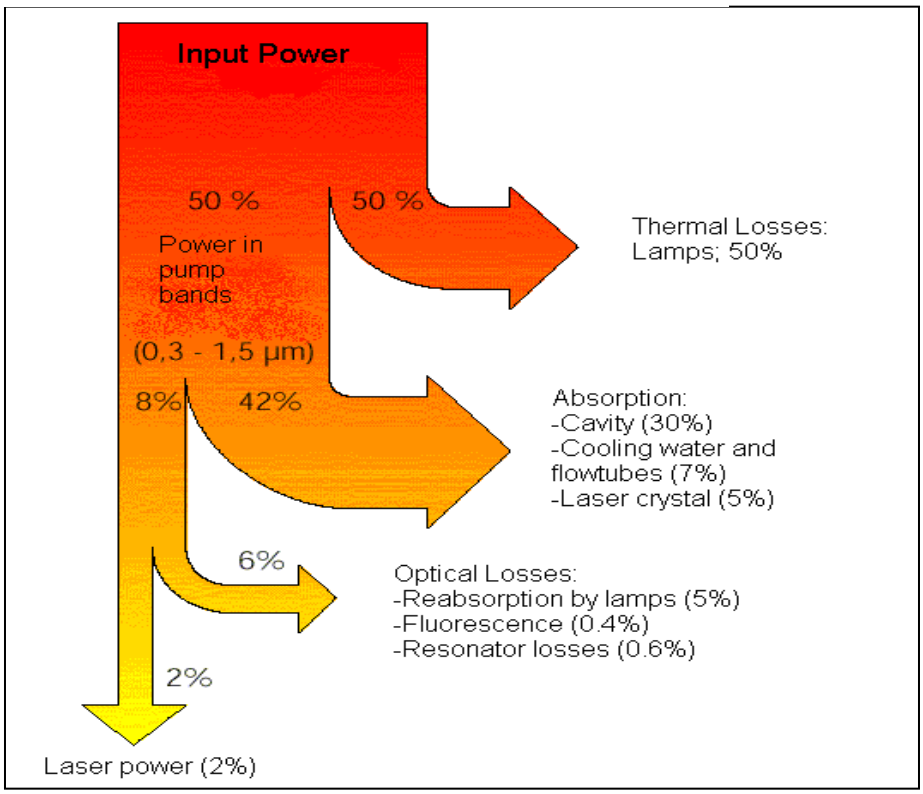

Figure15: Energy losses in a Nd:YAG laser.

New developments in this field include the use of diode lasers as a pumping source that can be tuned to emit laser light at a particular wavelength.

Figure 16 illustrate a schematic diagram of energy transfer in diode-pumped Nd:YAG laser.

Summary of Nd lasers according to groups:

- Solid state laser.
- Emit in the Near-Infra-Red (NIR) spectrum range.
- Optically pumped.
- Operate in both pulsed and continuous mode.
- Four level laser.

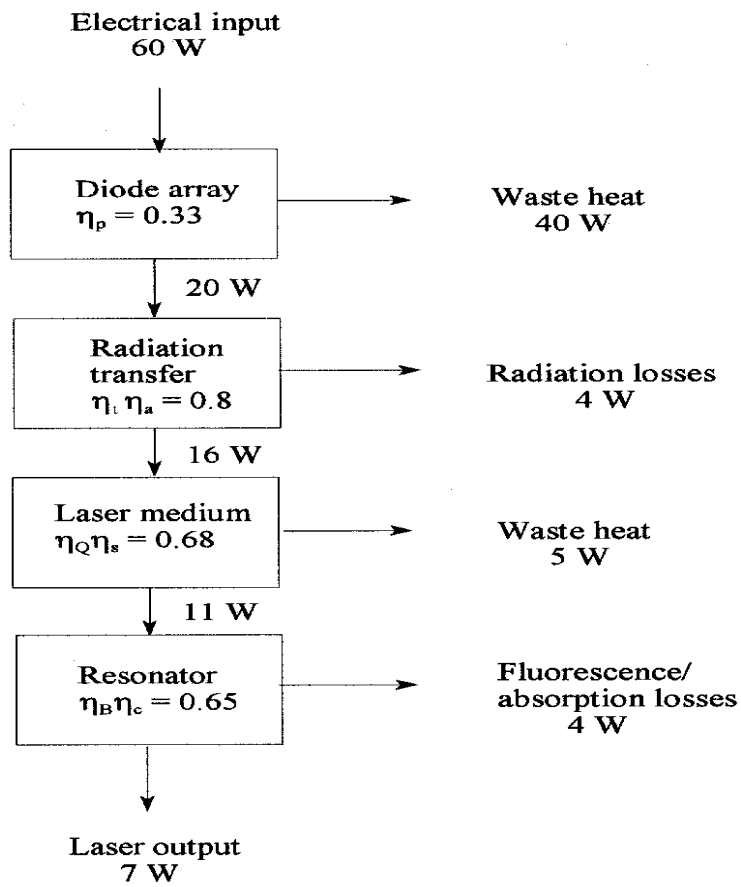

Figure 16: Energy flow in a typical diode- pumped Nd:YAG laser.

<u>Alexandrite Laser (Cr^{+3}:$BeAl_2O_4$)</u>

Alexandrite laser is a solid state laser in which Chromium ions (Cr^{+3}), at the amount of 0.01-0.4 %, are embedded in $BeAl_2O_4$ crystal. It has energy level

structure similar to the energy level structure of Ruby laser.Moreover it was found that the lasing wavelength could be varied over the range 700−820 nm. It was the first tunable solid state laser to reach the market.

. Depending on the angle of the prism only one wavelength will strike the end mirror at normal incidence and thus be reflected back and amplified.

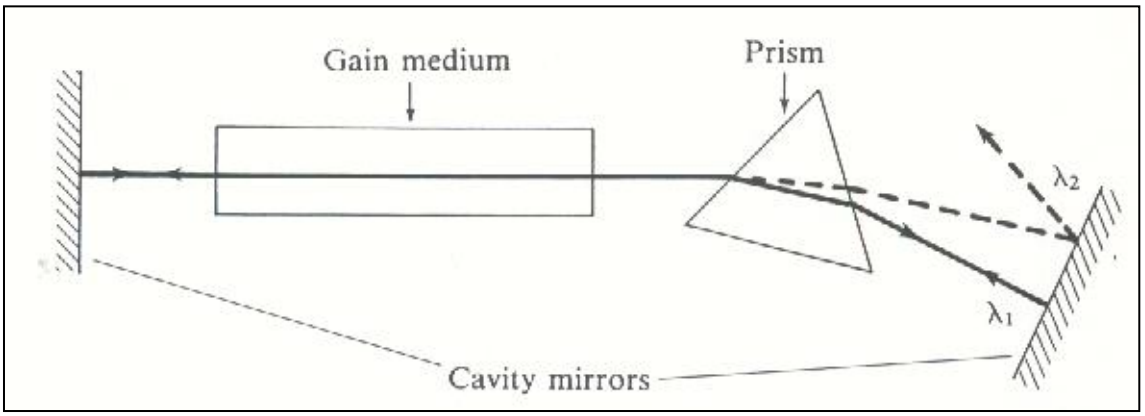

Figure 18: Cavity wavelength tuning using a prism as the dipersive element. Light of wavelength λ_1 meets the cavity mirror at normal incidence and is reflected back through the laser medium. Light at other wave−lengths (λ_2 say) is reflected out of the laser cavity.

Color or F center lasers

When crystals of alkali halides are exposed to high energy radiation, such as X−rays or electron beams, point defects are formed within the crystal. These point defects introduce new electron energy levels within the material.

Summary of Color Center Laser according to Groups:

- Solid state laser.
- Optically pumped usually by another laser (which emit in the absorption spectrum of the color center). Since the energy levels are not discrete but bands, it is a tunable laser, and the emitted wavelength can be controlled.

Applications of Color Center Lasers:

- Basic research: Spectroscopy of atoms and molecules (because of the narrow bandwidth of the emitted wavelength, and the broad range of tunability).
- Laser chemistry - to initiate chemical reaction by selective excitation of specific levels of atoms and molecules.

Titanium Sapphire Laser

Titanium ion (Ti^{+3}) embedded in a matrix of Sapphire (Al_2O_3) gives: $Ti:Al_2O_3$. This material is the active medium of the laser called Titanium doped Sapphire laser. The amount of Titanium ions inside the host material is about 0.1%, and they replace Aluminum atoms in the crystal. Ti :Saphire lasers belong to a family of lasers called Vibronic Lasers in which trivalent Chromium or Titanium are embedded in solid host .Ti: Sapphire laser was first demonstrated in 1982 by Peter Moulton MIT Lincoln Laboratory. Commercial continuous wave systems entered the market in 1988.They replace the Dye lasers in the Near-Infra-Red (NIR), because they are much more reliable and easier to use.

Summary of properties of Titanium Sapphire lasers:

- Usually optically pumped by another laser.
- Can be operated continuously or pulsed.
- Continuous power of a few watts can be achieved by pumping with Argon Ion laser.
- Has the broadest tuning range of all lasers known today, with possible lasing wavelengths 670 - 1100 nm.
- Operate at room temperature.
- Very efficient (up to 80% quantum efficiency at room temperature).

APPENDIX 2 (Solid-state lasers)

1. Energy flow in a solid-state laser system.

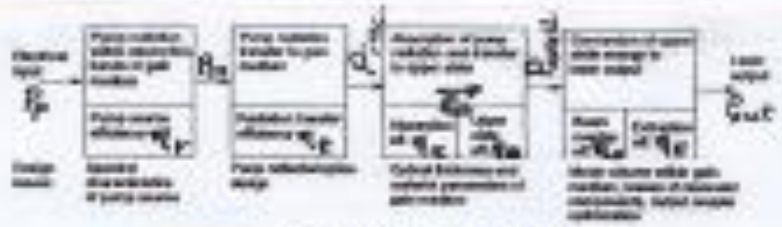

where:

P_p : Electrical pumping power (energy).

P_{in} : Optical pumping power.

P_{inc} : incident power

P_{ab} : absorbed power

P_{avail} : available power in upper state.

P_{out} : laser output power.

a- The pump Efficiency (η_p)

$$\eta_p = \eta_r \eta_t \eta_a \quad \text{———} (1)$$

$$\eta_a = 1 - e^{-\alpha \ell} \quad \text{———} (2)$$

α : absorption coefficient.

ℓ : Length of the active medium.

b- The Excitation Efficiency (η)

$$\eta = \eta_p \eta_Q \eta_B \quad \text{———} (3)$$

$$\eta_Q = \frac{h\nu}{h\nu_p} = \frac{\lambda_p}{\lambda} \quad \text{———} (4)$$, laser quantum efficiency (upper state efficiency)

$\eta_B = \frac{A_b}{A}$ ------ (4), Transverse efficiency (Beam overlap efficiency)

A_b : [redacted] cross-sectional area of the laser mode (πW_0^2).

A : cross-sectional area of the active medium.

c- Slope Efficiency (η_s) : The slop. efficiency of a four-level laser can be written as :

$$\eta_s = \eta \cdot \eta_c \quad \text{------} (5)$$

η_c = output coupling efficiency

$$\eta_c = \frac{\gamma_2}{2\gamma} = \frac{\ln 1/R_2}{2\alpha\ell + \ln 1/R_1R_2} = \frac{\gamma_2}{2S + \gamma_2} \text{ (for } R_1 = 100\%) \text{ --- (6)}$$

$$\therefore \eta_s = \eta_p \left(\frac{\lambda_p}{\lambda}\right)\left(\frac{A_b}{A}\right)\left(\frac{\gamma_2}{2\gamma}\right) \quad \text{------} (7)$$

d- Overall System Efficiency (electrical to optical efficiency) (η_{sys})

$$\eta_{sys} = \frac{P_{out}}{P_p} = \eta_E \eta \quad \text{------} (8)$$

$$\eta_E = \frac{P_{out}}{P_{avail.}} \quad \text{------} (9), \text{ Extraction efficiency}$$

η_E describes the fraction of total available upper state power or energy which appears as the output of the laser.

e- Optical-to-optical conversion efficiency ($\eta_{opt.}$)

$$\eta_{opt} = \frac{P_{out}}{P_{in}} \quad \text{------} (10)$$

2- CW laser behavior of an Nd:YAG Laser

a- The threshold electrical pump power (P_{th}) can be given as:

$$P_{th} = \frac{\gamma}{\eta_p}\left(\frac{h\nu_p}{\tau}\right)\left(\frac{A}{\sigma}\right) \quad \text{------} \quad (11)$$

where:

γ = is the total single-pass loss ($\gamma = K_{th}\ell = \alpha\ell + \frac{1}{2}\ln\frac{1}{R_1R_2}$).

ν_p = exc pump frequency.

τ = the upper laser level lifetime (230 μs for Nd:YAG).

σ = effective stimulated emission cross-section.

b- The output power of an Nd:YAG laser can be given by the following theoretical expression:

$$\left.\begin{aligned} P_{out} &= \eta_s(P_p - P_{th}) \\ &= \eta_s P_{th}\left(\frac{P_p}{P_{th}} - 1\right) \\ &= (A_b I_s)\left(\frac{\gamma_2}{2}\right)\left(\frac{P_p}{P_{th}} - 1\right) \end{aligned}\right\} \quad \text{----} (12)$$

where:

$I_s = \frac{h\nu}{\sigma\tau}$ ---- (13), saturation intensity for a four-level system.

ν = the laser frequency

$\gamma_2 = \ln 1/R_2$, output coupler loss.

<u>Note</u>: For longitudinal pumping under optimum conditions, the mode spot size and the spot size of the pump

beam are equal, so that $A = A_b$, and hence $\eta_B = 1$.

Ex. Consider the laser system in figure below where rod diameter = 6.4 mm, rod length = 7.5 cm, the absorption coefficient is $5.1 \times 10^{-3}\ cm^{-1}$, is pumped by an elliptical chamber by a high pressure Kr lamp with a wavelength of 800 nm. The laser mode has

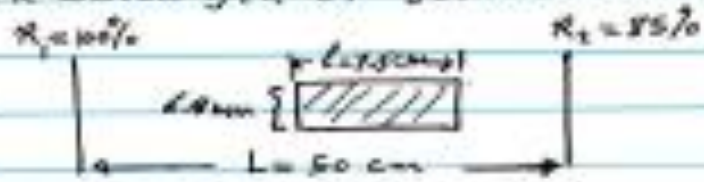

a radius of 2.7 mm at its waist, and the pump efficiency is 6%. Find the threshold pump power, the laser output power, the absorption efficiency, the slope efficiency and the system efficiency. ($\tau = 230\ \mu s$ & $\sigma = 2.8 \times 10^{-19}\ cm^2$ & pump power = 10 kW).

$$P_{th} = \frac{\gamma}{\eta_p}\left(\frac{h\nu_p}{\tau}\right)\left(\frac{A}{\sigma}\right)$$

$$\gamma = \gamma_i + \frac{1}{2}\ln 1/R_1R_2 = \alpha\ell + \frac{1}{2}\ln 1/R_2$$

$$= 5.1 \times 10^{-3} \times 7.5 + \frac{1}{2}\ln 1/0.85 \cong 0.12$$

$$P_{th} = \frac{0.12}{0.06}\left(\frac{6.625 \times 10^{-34} \times 3 \times 10^{8}}{800 \times 10^{-9} \times 230 \times 10^{-6}}\right)\left(\frac{(0.32)^2 \times \pi}{2.8 \times 10^{-19}}\right)$$

$P_{th} = 2.48 \times 10^{3}\ W = 2.48\ kW$ the threshold pump power

$$\eta_s = \eta \cdot \eta_c = \eta_p \eta_a \eta_B \eta_c = \eta_p\left(\frac{\lambda_p}{\lambda}\right)\left(\frac{A_b}{A}\right)\left(\frac{\gamma_2}{\gamma}\right)$$

$$\eta_s = 0.06\left(\frac{800 \times 10^{-9}}{1.064 \times 10^{-6}}\right)\left(\frac{\pi(0.27)^2}{\pi(0.32)^2}\right)\left(\frac{0.163}{2 \times 0.12}\right) = 2.18\%$$

$P_{out} = \eta_s (P_p - P_{th})$

$= 0.0218 (10\times10^3 - 2.48\times10^3) = 164\ W$, the laser output power

$\eta_a = 1 - e^{-\alpha l} = 1 - e^{-5.1\times10^{-3}\times 7.5} = 0.0375$

$\eta_a = 3.75\%$, the absorption efficiency

$\eta_{sys} = \frac{P_{out}}{P_p} = \frac{164}{10\times10^3} = 1.6\times10^{-2} = 1.6\ \%$

H.W. Calculate η to find $\eta_e \simeq 60\%$.

Q1) A $Ti:Al_2O_3$ laser is longitudinally pumped by the focused beam of an Ar^+ laser at the pump wavelength $\lambda_p = 514$ nm. A wavelength tuner is inserted in the cavity, forcing the laser to oscillate at 850 nm. Assume a round trip loss of the cavity $\gamma_{rt} = 10\%$, an output mirror reflectivity of 95% and a pump efficiency $\eta_p = 30\%$. Assume also that the laser is under optimum pumping conditions. Calculate the laser slope efficiency. Note: $\gamma_{rt} = 2\gamma$, Ans. $\eta_s = 9.3\%$

Q2) A Nd:YAG laser is transversely pumped at 808 nm. The laser mode has a spot size $W_0 = 1.4$ mm; the stimulated emission cross-section is $\sigma = 2.8\times10^{-19}\ cm^2$ and the upper level lifetime $\tau = 230\ \mu s$. Assume that an output coupler with a transmission $T = 12\%$ is used and that the pump threshold is $P_{th} = 48.8\ W$. Calculate the pump power required to obtain an output power $P_{out} = 05\ W$ from this laser.

Ans. D = 0.11 W