University of technology

Building and construction department

Effect of the soil properties and pile dimensions on the precast pile capacity

A project submitted to the Building and construction department

University of Technology in partial fulfillment of

The requirement for the degree of B.CS

Prepared by:

Osama Mustafa Hamed

Supervisor:

Prof. Kais Taha Shlash

2010 – 2011

شكر وتقدير

أتقدم بشكري و تقديري و امتناني إلى أستاذي الفاضل

البروفيسور قيس طه شلاش

لما قدمه لي من جهد و توجيه

وأرشدني بكل إخلاص لأقدم بحثي هذا

واني أضعة بين يده ثمرة طيبة لجهوده الكريمة

وأتقدم بشكري وتقديري إلى كل الأساتذة الذين ساهموا في وصولنا إلى هذه المرحلة

ولا يفوتني عرفاناً بالجميل أن أتقدم بالشكر الجزيل إلى الدكتور(مصطفى احمد الهرمزي)

مع خالص امتناني إلى كل من ساهم في مساعدتي لتقديم هذا البحث

والله ولي التوفيق

الإهـــــداء

إلى الذي بحبة أنار دربي

إلى الذي حنانه زرع ثقتي

إلى من هو صديقي و حبيبي

إلى الإنسان الأسمى الذي لا أنساه طوال حياتي

إلى والدي الغالي.....

إلى من كان دعاءها دليلي في ظلمتي

إلى التي ذرفت الدموع من اجلي

إلى ينبوع الحنان و القلب الطيب الوفي

إلى نبض قلبي أمي.....

إلى الذين علموني كيف امسك القلم و زهدوا بعملهم لأجلي

إلى من أبصرني بدروب الحياة و أنار أمامي معالم الطريق

إلى من وقف إلى جانبي ومنحني من علمه و فضله و توجيهه

إلى أساتذتي مع فائق حبي و تقديري.....

Supervisor Certificate

I certify that the preparation of this project entitled "Effect of the soil properties and pile dimensions on the pile capacity" was made under my Supervision in the Building and construction Engineering Department in the University of Technology, as a partial fulfillment of the requirements of the B.Sc degree in Science of Building and Construction.

Signature:
Name: Prof.Kais Taha Shlash
Title: Assistant prof
Date: 24/ 5 /2011

CONTENTS

Subject	Page
Chapter one: Introduction	
1-1 Introduction	***1***
Chapter two: Type of piles	
2.1 Type of piles	***5***
2.2 Factors Governing the choice of Pile Type	***5***
2.3 large Displacement Piles	***8***
2.3.1 Driven and Cast – in - Place	***8***
2.3.2 Driven Precast Reinforced or Prestressed concrete Piles	***9***
2.3.3 Timber Piles	***10***
2.4 Small Displacement Piles	***11***
2.5 Bored and cast –in- place non – Displacement Piles	***12***
2.5.1 Advantages	***12***
2.5.2 Disadvantage	***12***
2.6 Typical Pile Characteristics and Uses	***14***
2.6.1 Timber Piles	***14***
2.6.2 Steel Piles	***16***
2.6.3 Cast-in- place concrete piles (Shells driven without mandrel)	***18***
2.6.4 Cast –in- place concrete piles (Shell withdrawn)	***20***

2.6.5 Concrete – filled steel pipe piles	*22*
2.6.6 Composite piles	*24*
2.6.7 Precast concrete (Including prestressed)	*26*
Chapter three: Results and Discussion	
3-1 About AllPile	*28*
3-2 Pile Type Page	*28*
3-3The basic problem	*47*
3-4The parametric study	*47*
3-4-1 The effect of the cohesion (c)	*47*
3-4-2 The effect of the angle of internal fraction (ϕ)	*49*
3-4-3 The effect of the total unit weight (ϒt)	*50*
3-4-4 The effect of the diameter (d)	*51*
3-4-5 The effect of the length (L)	*52*
Chapter four: Abstract	
abstract	*54*

Chapter one

Introduction

CHAPTER ONE

Introduction

1.1 Introduction

Piles are structural members of timber, concrete, and/or steel that is used to transmit surface loads to lower levels in the soil mass. This transfer may be by vertical distribution of the load along the pile shaft or a direct application of load to a lower stratum through the pile point. A vertical distribution of the load is made using a friction (or floating) pile and a direct load application is made by a point, or end-bearing, pile. This distinction is purely one of convenience since all piles carry load as a combination of side resistance and point bearing except when the pile penetrates an extremely soft soil to a solid base. Piles are commonly used (see figure. 1-la & b & c & d &e) for the following purposes:

1- To carry the superstructure load into or through a soil stratum. Both vertical and lateral loads may be involved.

2- To resist uplift, or overturning, forces, such as for basement mats below the water table or to support tower legs subjected to overturning from lateral loads such as wind.

3- To compact loose. Cohesion less deposits through a combination of pile volume displacement and driving vibrations. These piles may be later pulled.

4- To control settlements when spread footings or a mat is on a marginal soil or is underlain by a highly compressible stratum.

5- To stiffen the soil beneath machine foundations to control both amplitudes of vibration and the natural Frequency of the system.

6- As an additional safety factor beneath bridge abutments and/ or piers, particularly if scour is a potential problem.

7- In offshore construction to transmit loads above the water surface through the water and into the underlying soil. This case is one in which partially embedded piling is subjected to vertical (and buckling) as well as lateral loads.

A pile foundation is much more expensive than spread footings and. likely to be more expensive than a mat. In any case great Care should be exercised in determining the soil properties at the site for the depth of possible interest so that one can as accurately as possible determine whether a pile foundation is needed and ,if so , that neither an excessive number nor lengths are specified . A cost analysis should be made to determine whether a mat or piles, in particular the type (steel, Concrete, etc), are more economical. In those cases where piles are used to control settlement at marginal soil sites, care should be taken to utilize both the existing ground and the piles in parallel so that a minimum number are required.

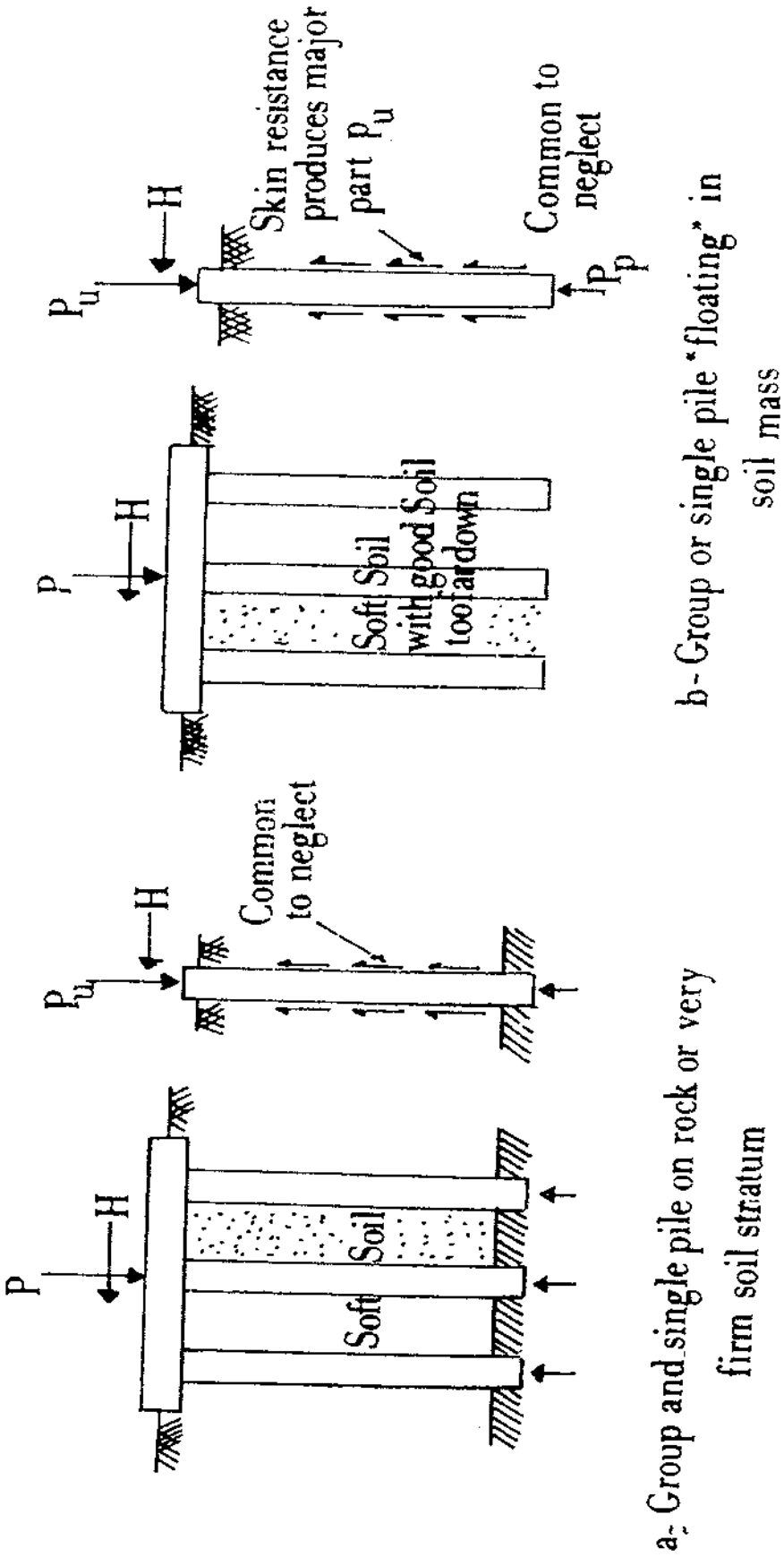

a- Group and single pile on rock or very firm soil stratum

b- Group or single pile "floating" in soil mass

Figure 1-1 (a & b)

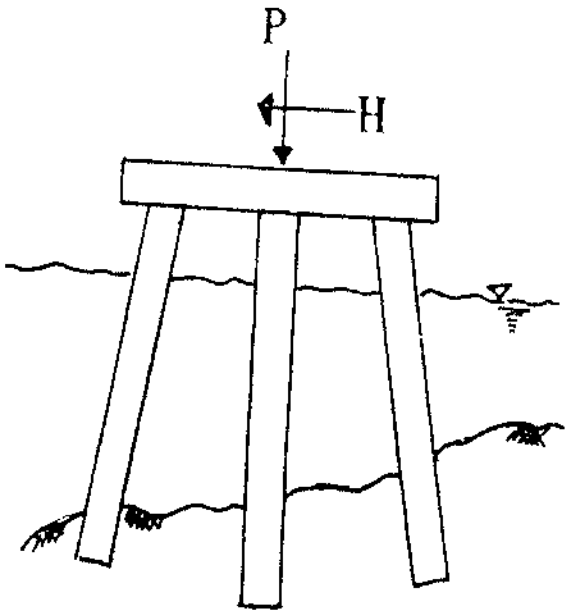

c- Offshore pile group

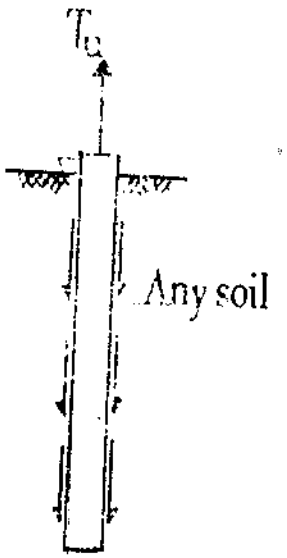

d- Tension pile

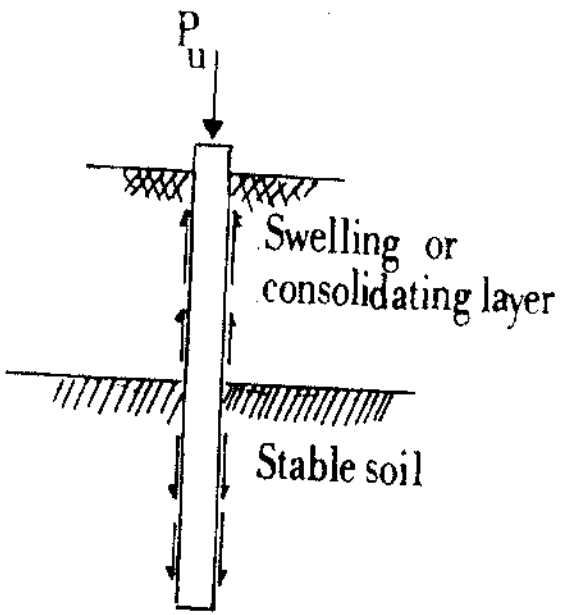

e- Pile penetrating below a soil layer which swells (shown) or consolidates

Figure 1-1 (c , d & e)

Chapter two

Type of piles

CHAPTER TWO
Type of piles

2.1 Type of Piles

Piles may be classified in a number of ways. Following the code of practice for foundations, CP 2004 • 1972, which is based on the effect the pile has on the soil during installation, piles are considered to fall into three main classes • very large displacement, small displacement, and non-displacement to further sub - divisions as shown in figure (2.1)

2.2 Factors Governing the Choice of Pile Type

Vital factors to be taken into consideration when determining the type of pile to used are;

1- The location and type of structure

2- Ground conditions, including the position of the ground water table

3- Durability in the long term. Timber piles are subject to decay, particularly above the water table, and to attack by marine borers. Concrete is liable to chemical attack in.

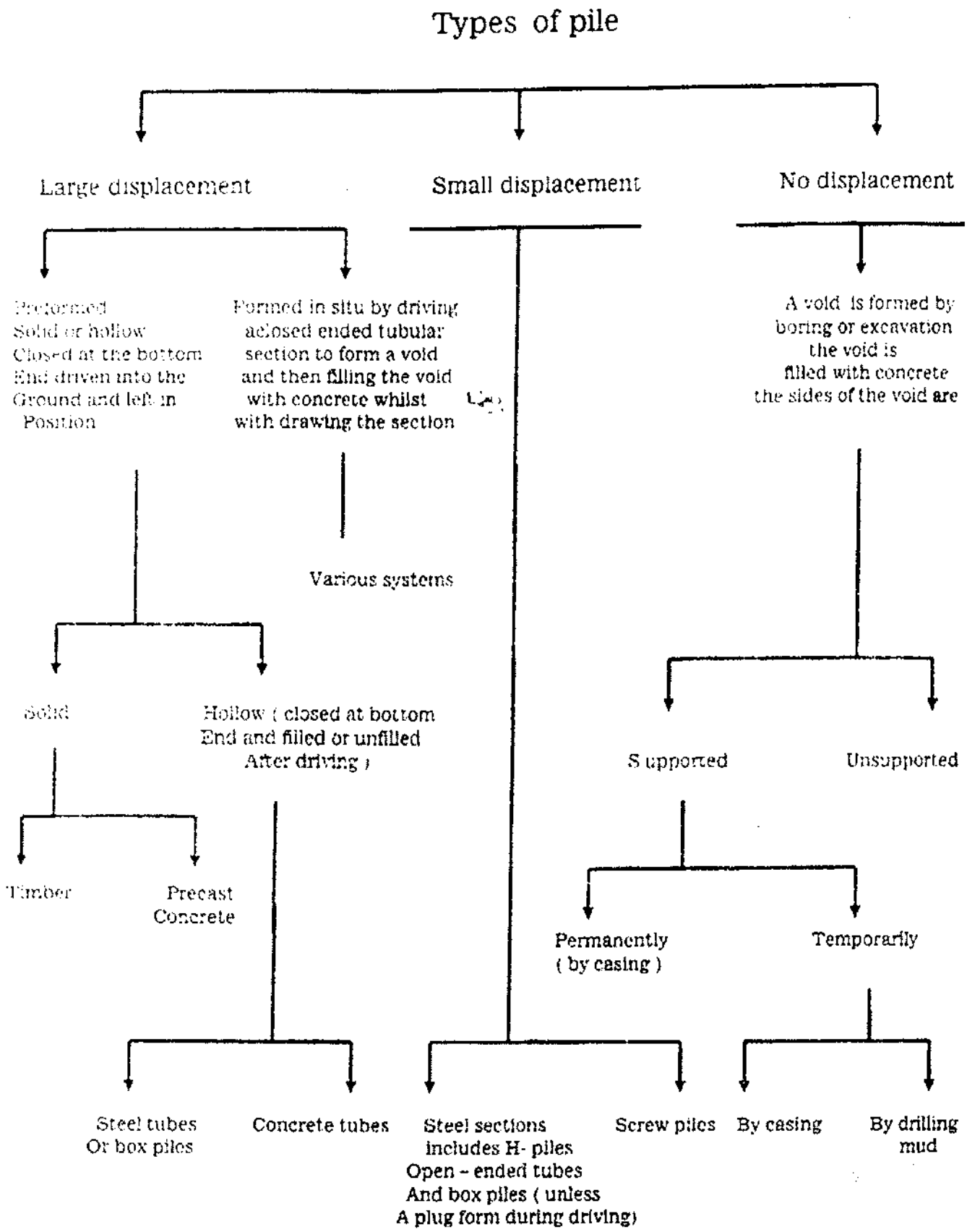

Figure (2-1) Classification of piling systems

The presence of salts and acids in the ground, and steel piles may suffer from corrosion, if the specific resistivity of the clay is low and the degree of depolarization is high.

4- Overall cost to the client. The cheapest form of piling is not necessarily the cheapest pile per meter run. Delays to the Contract owing to lack of experience or lack of appreciation of a particular problem by the piling contractor may add considerably to the total cost of a project. The cost of pile testing should be considered if the piling contractor has insufficient experience to establish the required pile length or diameter. In particular, heavy additional costs to the contract may be incurred piles fail under test load It is advantageous to use a reputable firm with good local experience. It should be stressed that most delays and troubles on piling contracts can be avoided by carrying out a thorough site investigation at as early a stage as possible.

2.3 Large Displacement Piles

2.3.1 Driven and Cast - in - Place

The advantages are:

1- Can be driven to a predetermined set

2- Pile lengths are readily adjustable

3- An enlarged base can be formed which can increase the relative density of a granular founding stratum leading to much higher and bearing capacity

4- Reinforcement is not determined by the effects of handling or driving stresses

5- Can be driven with a closed end so excluding the effects of ground water

6- Noise and vibration can be reduced in some types, for example by driving on a plug at the bottom of the pile.

The disadvantages are:

1- Heave of neighboring ground surface, which could nearby structures or services.

2- Disturbance of the soil, which could lead to reconsolidation and the development of negative skin friction forces on piles.

3- Displacement of nearby retaining walls.

4- Lifting of previously driven piles, where the penetration at the piles into the bearing stratum has not been sufficient to develop the necessary resistance to upward forces.

5- Tensile damage to unreinforced piles or piles consisting of green concrete, where forces at the toe have been sufficient to resist upward movements.

6- Damage to piles consisting of uncased or thinly cased green concrete due to the lateral forces set up in the soil, for example, necking or wasting.

7- Concrete cannot be inspected after completion

8- Concrete may be weakened if artesian flow pipes up shaft of piles when tube is withdrawn

9- Light steel section or precast concrete shells may be damaged or o distorted by hard driving.

10- Limitation in length owing to lifting force required to withdraw casing

11- Noise,vibration and ground displacement may cause a nuisance or may damage adjacent structures

12- Cannot be driven with very large diameters nor can very large end bulbs be formed

13- Cannot be driven where headroom is limited. Pile lengths of up to 24 m and pile loads of about to 1500KN are common.

2.3.2 Driven Precast Reinforced or Pre stressed Concrete Piles

The advantages are:

1- Can be driven to predetermined set

2- Stable in squeezing ground, for example, soft clays, silts and peats.

3- Pile material can be inspected before piling

4- Can be redriven if affected by ground heave

5- Construction procedure unaffected by ground water

6- Can be driven in long lengths

7- Can be carried above ground level, for example , through water for marine structures

8- Can increase the relative density of a granular founding stratum.

The disadvantages are:

1- Heave and disturbance of surrounding soil may cause Difficulties, as discussed earlier for driven and cast - in Place piles.

2- Cannot readily be varied in length.

3- May be damaged due to hard driving.

4- Reinforcement may be controlled by handling and driving requirements rather than by stresses caused by structural loads

5- Cannot be driven with very large diameters or in conditions of limited headroom

6- Noise, vibration and ground displacements may cause difficulties.

Pile lengths up to 27 m and pile loads up 1000 KN are usual.

2.3.3 Timber Piles

Timber piles are light, easy to handle and, in some countries, cheap. They can be joined together and can be provided with driving points. Timbers piles are liable to decay and attack by marine borers and generally are only used below the water table but can be pressure impregnated to provide protection above the water table. They are usually used as friction piles but, on occasions, as point bearing

piles. In this case, care must be taken to avoid damage owing to overdriving.

The danger of damaging the pile during driving can be reduced by limiting the drop and the number of blows of the hammer. The weight of the hammer should at least be equal to the weight of the pile for hard driving conditions and not less than half the weighty Of the pile for easy driving. Pile lengths up to 20 m and loads up to 600 KN are usual.

2.4 Small Displacement Piles

Examples of these piles are rolled steel sections, screw piles, or open — ended tubes and hollow sections where the soil is removed during penetration. Some of the remarks listed under section 2.3 apply.

Rolled steel section piles are easily handled and can be driven hard. They can be driven in very long lengths and the pile length can be readily varied. They can carry heavy loads and can be successfully anchored in steeply sloping rock surfaces (Bjrrum, 1957). The piles are liable to corrosion which can be allowed for in design or can be treated using cathodic protection, or the piles can be coated. Screw piles are valuable in marine works because they can resist both tensile and compressive forces. In general, small displacement piles are particularly useful if ground displacements and disturbance must be severely curtailed. Rolled steel section piles are used up to 36 m in length with pile loads of up to 1700 KN, and with screw piles, length of up to 24 m with working loads up to 2500 KN are possible.

2.5 Bored and Cast -in-Place non -Displacement Piles

2.5.1 Advantages

1- No risk of ground heave
2- Length can be readily varied
3- Soil can be inspected and compared with site investigation data
4- Can be installed very long lengths, with very large diameters, and end enlargements of up to two or three pile diameters are possible in clays and soft rocks
5- Reinforcement is not dependent on handling or driving conditions
6- Can be installed without appreciable noise or vibration, and under conditions of limited headroom.

2.5.2 Disadvantages

1- Boring methods may loosen sandy or gravelly soils or Change soft rocks to a slurry, for example, chalk or marl
2- Susceptible to wasting or necking in squeezing ground
3- Difficulties with concreting under water. The concrete cannot subsequently be inspected.
4- An inflow of water may cause damage to the unset Concrete in the pile or may cause a disturbance to the surrounding ground leading to reduced pile bearing capacity
5- Enlarged ends cannot be formed in granular soils.

Concrete should be placed as soon as possible after boring the hole, to avoid softening of the ground. It is important to have adequate workability, so that the concrete can flow against the walls of the shaft.

In practice, this means that the concrete slump should be in the range of 100 mm to 150 mm.

To avoid segregation, honeycombing, bleeding and other defects resulting from high water content, the use of a plasticizing additive may be beneficial. In general, the concrete should contain not less than 300kg of cement per cubic meter. Pile lengths of up to 45 m with loads of up 10 000 KN are not unusual.

2.6 Typical Pile Characteristics and Uses

2.6.1 Timber Piles

Maximum length	35 m
Optimum length	9- 20 m
Maximum load for Usual conditions	450KN
Optimum load range	80 – 240 KN
Disadvantages	Difficult to splice vulnerable to Damage in hard driving vulnerable To decay unless treated difficult to Pull and replace when broken during driving
Advantage	Comparatively low initial cost permanently submerge piles are resistant to decay easy to handle
Remarks	Best suited for friction pile granular material

See figure (2.2)

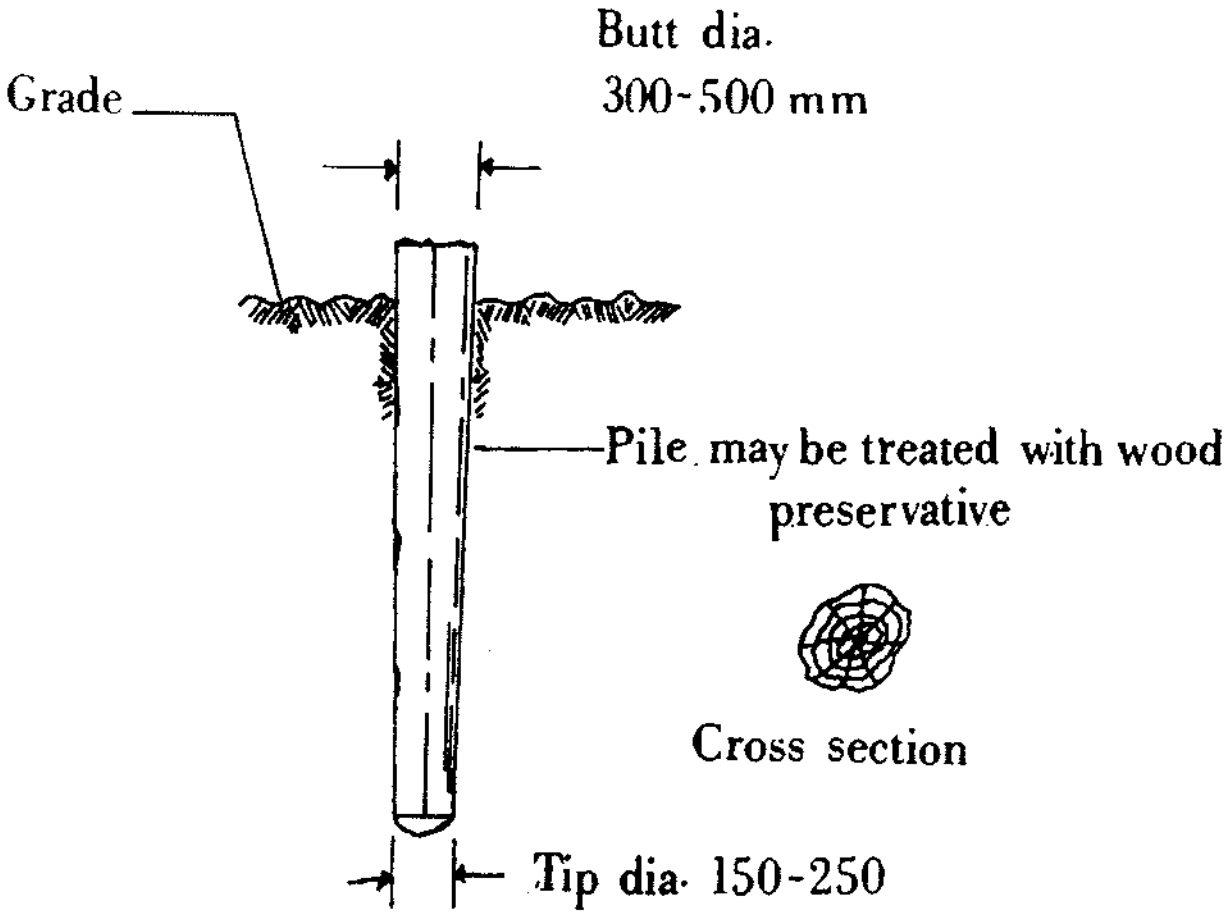

Figure (2.2) Timber Piles

2.6.2 Steel Piles

Maximum length	practically unlimited
Optimum length	12-50 m
Maximum load for Usual conditions	Maximum allowable stress x Cross section
Optimum load range	350-1045 KN
Disadvantage	vulnerable to corrosion, HP May be damaged or deflected by Major obstructions
Advantages	Easy to splice, high capacity, small displacement, able to penetrate through light obstructions
Remarks	Best suited for end bearing on rock Reduce allowable capacity for corrosive location or provide corrosion protection.

See figure (2.3)

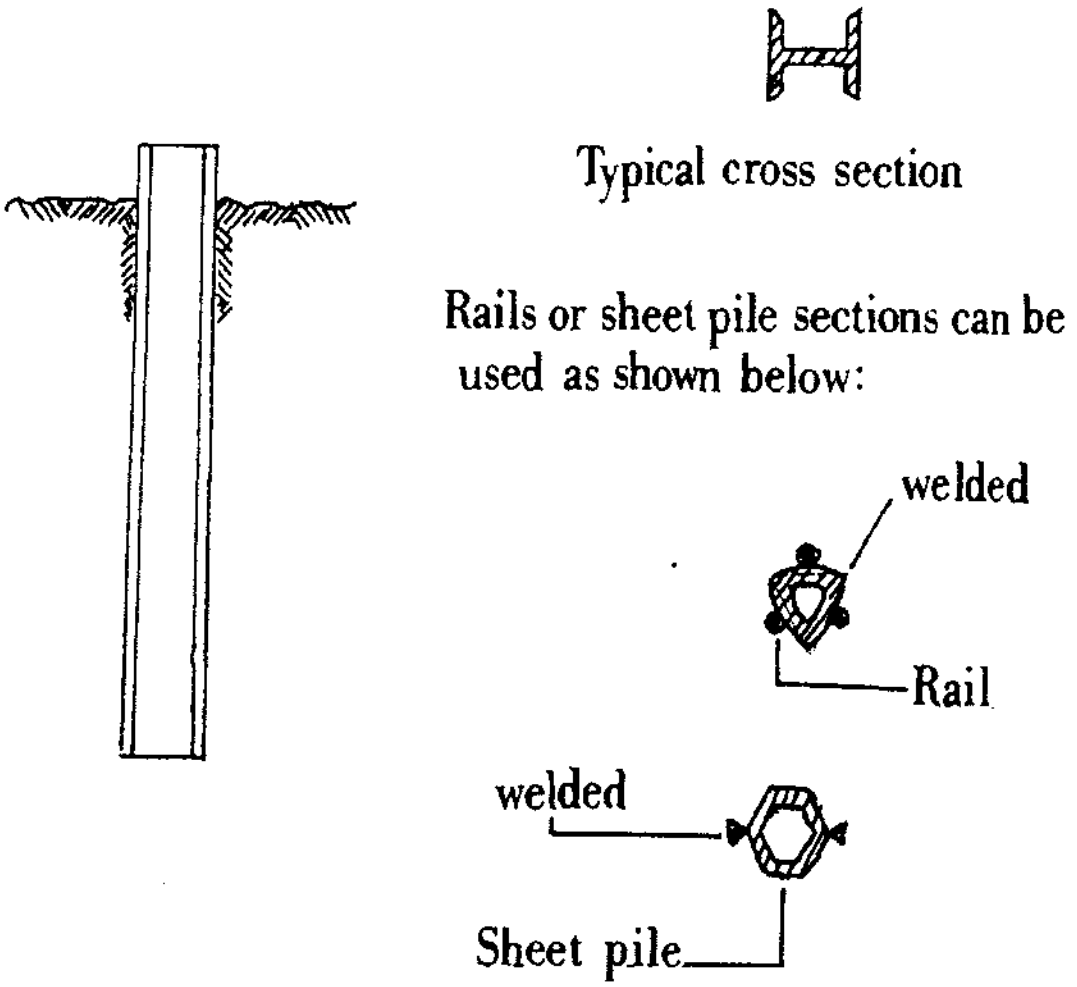

Figure (2.3) Steel Piles

2.6.3 Cast-in-Place Concrete Piles
(Shells driven without mandrel)

Maximum length	10-25 m
Optimum length	9-25 m
Maximum load for Usual conditions	900 KN
Optimum load range	450-700 KN
Disadvantages	hard to splice after concreting, considerable displacement
Advantages	can be redriven shell not easily damaged
Remarks	Best suited for friction piles of Medium length

See figure (2.4)

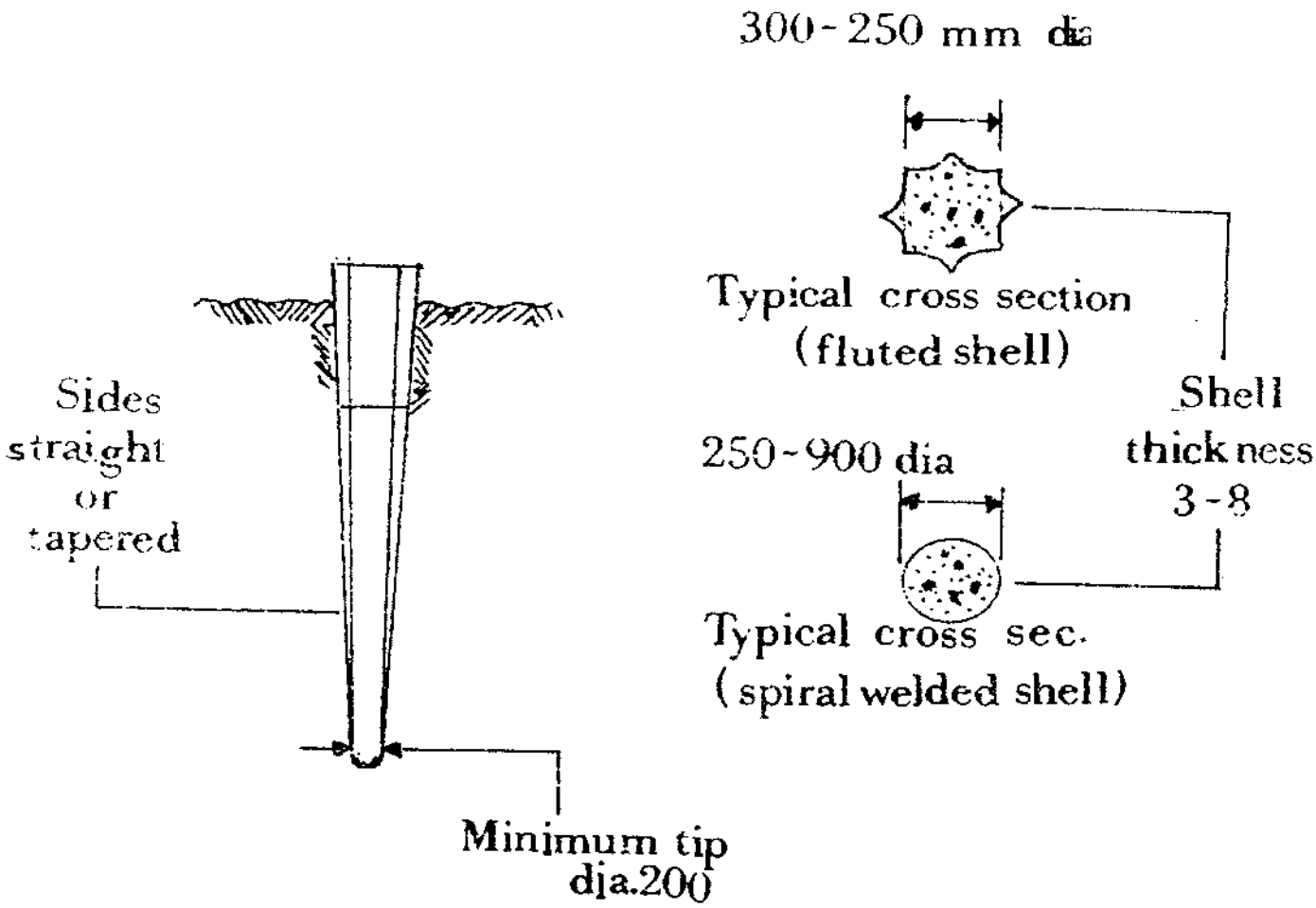

Figure (2.4) Cast – in – Place Concrete Piles
(Shells Driven Without Mandrel)

2.6.4 Cast –in- Place Concrete Piles (Shells withdrawn)

Maximum length	36 m
Optimum length	S- 12 m
Maximum lead for Usual conditions	1300 KN
Optimum load range	350-900 KN
Disadvantages	Concrete should be placed in dry, more than average dependence on quality of workmanship
Advantage	Initial economy
Remarks	Allowable load on pedestal pile is controlled by bearing capacity of stratum immediately below pile

See figure (2.5)

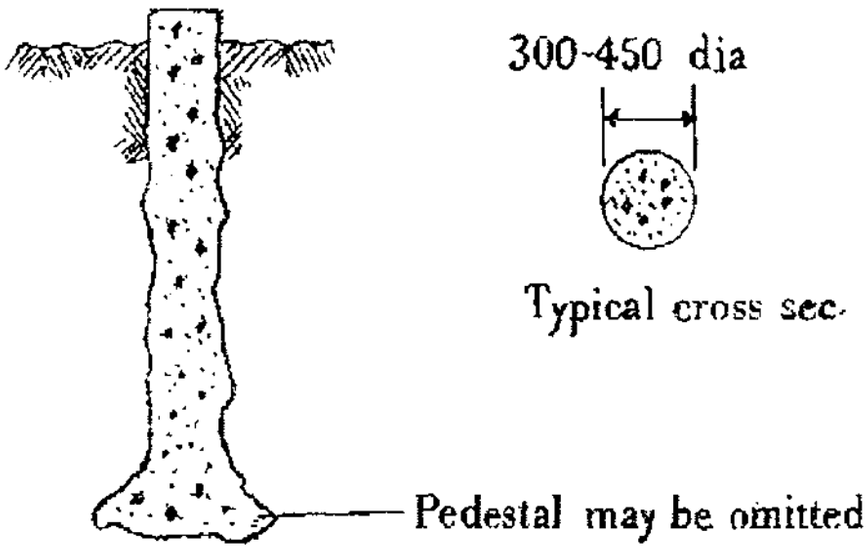

Figure (2.5) Cast – in – Place Concrete Piles
(Shells Withdrawn)

No.	Dia. Cm	length	C	Ø	⍰	load	Q allow. kN
1	30	10	25	5	15	300	236.215
2	30	10	25	5	15	500	236.215
3	30	10	25	5	15	800	236.215
4	30	10	25	5	17	300	242.753
5	30	10	25	5	17	500	242.753
6	30	10	25	5	17	800	242.753
7	30	10	25	5	20	300	252.668
8	30	10	25	5	20	500	252.668
9	30	10	25	5	20	800	252.668
10	30	10	25	10	15	300	286.925
11	30	10	25	10	15	500	286.925
12	30	10	25	10	15	800	286.925
13	30	10	25	10	17	300	300.807
14	30	10	25	10	17	500	300.807
15	30	10	25	10	17	800	300.807
16	30	10	25	10	20	300	321.899
17	30	10	25	10	20	500	321.899
18	30	10	25	10	20	800	321.899
19	30	10	25	20	15	300	327.2142
20	30	10	25	20	15	500	327.2142
21	30	10	25	20	15	800	327.2142
22	30	10	25	20	17	300	351.736
23	30	10	25	20	17	500	351.736
24	30	10	25	20	17	800	351.736
25	30	10	25	20	20	300	389.4167
26	30	10	25	20	20	500	389.4167
27	30	10	25	20	20	800	389.4167
28	30	10	50	5	15	300	384.403
29	30	10	50	5	15	500	384.403
30	30	10	50	5	15	800	384.403
31	30	10	50	5	17	300	389.6667
32	30	10	50	5	17	500	389.6667
33	30	10	50	5	17	800	389.6667
34	30	10	50	5	20	300	397.689
35	30	10	50	5	20	500	397.689
36	30	10	50	5	20	800	397.689
37	30	10	50	10	15	300	425.8482
38	30	10	50	10	15	500	425.8482
39	30	10	50	10	15	800	425.8482
40	30	10	50	10	17	300	437.3819
41	30	10	50	10	17	500	437.3819
42	30	10	50	10	17	800	437.3819
43	30	10	50	10	20	300	455.045
44	30	10	50	10	20	500	455.045
45	30	10	50	10	20	800	455.045

No.	Dia. Cm	length	C	Ø	?	load	Q allow. kN
46	30	10	50	20	15	300	520.4592
47	30	10	50	20	15	500	520.4592
48	30	10	50	.20	15	800	520.4592
49	30	10	50	20	17	300	546.6211
50	30	10	50	20	17	500	546.6211
51	30	10	50	20	17	800	546.6211
52	30	10	50	20	20	300	586.7587
53	30	10	50	20	20	500	586.7587
54	30	10	50	20	20	800	586.7587
55	30	10	75	5	15	300	578.971
56	30	10	75	5	15	500	578.971
57	30	10	75	5	15	800	578.971
58	30	10	75	5	17	300	584.75
59	30	10	75	5	17	500	584.75
60	30	10	75	5	17	800	584.75
61	30	10	75	5	20	300	593.5269
62	30	10	75	5	20	500	593.5269
63	30	10	75	5	20	800	593.5269
64	30	10	75	10	15	300	624.1192
65	30	10	75	10	15	500	624.1192
66	30	10	75	10	15	800	624.1192
67	30	10	75	10	17	300	636.5622
68	30	10	75	10	17	500	636.5622
69	30	10	75	10	17	800	636.5622
70	30	10	75	10	20	300	655.5433
71	30	10	75	10	20	500	655.5433
72	30	10	75	10	20	800	655.5433
73	30	10	75	20	15	300	725.122
74	30	10	75	20	15	500	725.122
75	30	10	75	20	15	800	725.122
76	30	10	75	20	17	300	752.7744
77	30	10	75	20	17	500	752.7744
78	30	10	75	20	17	800	752.7744
79	30	10	75	20	20	300	795.053
80	30	10	75	20	20	500	795.053
81	30	10	75	20	20	800	795.053
82	30	12	25	5	15	300	285.6398
83	30	12	25	5	15	500	285.6398
84	30	12	25	5	15	800	285.6398
85	30	12	25	5	17	300	293.9054
86	30	12	25	5	17	500	293.9054
87	30	12	25	5	17	800	293.9054
88	30	12	25	5	20	300	306.4394
89	30	12	25	5	20	500	306.4394
90	30	12	25	5	20	800	306.4394

No.	Dia. Cm	length	C	Ø	⍰	load	Q allow. kN
91	30	12	25	10	15	300	349.824
92	30	12	25	10	15	500	349.824
93	30	12	25	10	15	800	349.824
94	30	12	25	10	17	300	367.4137
95	30	12	25	10	17	500	367.4137
96	30	12	25	10	17	800.	367.4137
97	30	12	25	10	20	300	394.1716
98	30	12	25	10	20	500	394.1716
99	30	12	25	10	20	800	394.1716
100	30	12	25	20	15	300	490.8593
101	30	12	25	20	15	500	490.8593
102	30	12	25	20	15	800	490.8593
103	30	12	25	20	17	300	529.3173
104	30	12	25	20	17	500	529.3173
105	30	12	25	20	17	800	529.3173
106	30	12	25	20	20	300	587.9467
107	30	12	25	20	20	500	587.9467
108	30	12	25	20	20	800	587.9467
109	30	12	50	5	15	300	532
110	30	12	50	5	15	500	532
111	30	12	50	5	15	800	532
112	30	12	50	5	17	300	540.6608
113	30	12	50	5	17	500	540.6608
114	30	12	50	5	17	800	540.6608
115	30	12	50	5	20	300	554.104
116	30	12	50	5	20	500	554.104
117	30	12	50	5	20	800	554.104
118	30	12	50	10	15	300	600.423
119	30	12	50	10	15	500	600.423
120	30	12	50	10	15	800	600.423
121	30	12	50	10	17	300	619.137
122	30	12	50	10	17	500	619.137
123	30	12	50	10	17	800	619.137
124	30	12	50	10	20	300	647.544
125	30	12	50	10	20	500	647.544
126	30	12	50	10	20	800	647.544
127	30	12	50	20	15	300	749.704
128	30	12	50	20	15	500	749.704
129	30	12	50	20	15	800	749.704
130	30	12	50	20	17	300	790.145
131	30	12	50	20	17	500	790.145
132	30	12	50	20	17	800	790.145
133	30	12	50	20	20	300	851.576
134	30	12	50	20	20	500	851.576
135	30	12	50	20	20	800	851.576

No.	Dia. Cm	length	C	Ø	?	load	Q allow. kN
136	30	12	75	5	15	300	790.363
137	30	12	75	5	15	500	790.363
138	30	12	75	5	15	800	790.363
139	30	12	75	5	17	300	799.851
140	30	12	75	5	17	500	799.851
141	30	12	75	5	17	800	799.851
142	30	12	75	5	20	300	814.1738
143	30	12	75	5	20	500	814.1738
144	30	12	75	5	20	800	814.1738
145	30	12	75	10	15	300	863.2826
146	30	12	75	10	15	500	863.2826
147	30	12	75	10	15	800	863.2826
148	30	12	75	10	17	300	883.043
149	30	12	75	10	17	500	883.043
150	30	12	75	10	17	800	883.043
151	30	12	75	10	20	300	912.953
152	30	12	75	10	20	500	912.953
153	30	12	75	10	20	800	912.953
154	30	12	75	20	15	300	1019.785
155	30	12	75	20	15	500	1019.785
156	30	12	75	20	15	800	1019.785
157	30	12	75	20	17	300	1061.816
158	30	12	75	20	17	500	1061.816
159	30	12	75	20	17	800	1061.816
160	30	12	75	20	20	300	1125.632
161	30	12	75	20	20	500	1125.632
162	30	12	75	20	20	800	1125.632
163	30	16	25	5	15	300	396.838
164	30	16	25	5	15	500	396.838
165	30	16	25	5	15	800	396.838
166	30	16	25	5	17	300	402.9256
167	30	16	25	5	17	500	402.9256
168	30	16	25	5	17	800	402.9256
169	30	16	25	5	20	300	421.358
170	30	16	25	5	20	500	421.358
171	30	16	25	5	20	800	421.358
172	30	16	25	10	15	300	485.302
173	30	16	25	10	15	500	485.302
174	30	16	25	10	15	800	485.302
175	30	16	25	10	17	300	511.26
176	30	16	25	10	17	500	511.26
177	30	16	25	10	17	800	511.26
178	30	16	25	10	20	300	550.756
179	30	16	25	10	20	500	550.756
180	30	16	25	10	20	800	550.756

No.	Dia. Cm	length	C	Ø	?	load	Q allow. kN
181	30	16	25	20	15	300	693.835
182	30	16	25	20	15	500	693.835
183	30	16	25	20	15	800	693.835
184	30	16	25	20	17	300	750.6926
185	30	16	25	20	17	500	750.6926
186	30	16	25	20	17	800	750.6926
187	30	16	25	20	20	300	837.3995
188	30	16	25	20	20	500	837.3995
189	30	16	25	20	20	800	837.3995
190	30	16	50	5	15	300	733.927
191	30	16	50	5	15	500	733.927
192	30	16	50	5	15	800	733.927
193	30	16	50	5	17	300	747.295
194	30	16	50	5	17	500	747.295
195	30	16	50	5	17	800	747.295
196	30	16	50	5	20	300	767.4956
197	30	16	50	5	20	500	767.4956
198	30	16	50	5	20	800	767.4956
199	30	16	50	10	15	300	836.831
200	30	16	50	10	15	500	836.831
201	30	16	50	10	15	800	836.831
202	30	16	50	10	17	300	864.744
203	30	16	50	10	17	500	864.744
204	30	16	50	10	17	800	864.744
205	30	16	50	10	20	300	907.0518
206	30	16	50	10	20	500	907.0518
207	30	16	50	10	20	800	907.0518
208	30	16	50	20	15	300	1059.279
209	30	16	50	20	15	500	1059.279
210	30	16	50	20	15	800	1059.279
211	30	16	50	20	17	300	1119.2244
212	30	16	50	20	17	500	1119.2244
213	30	16	50	20	17	800	1119.2244
214	30	16	50	20	20	300	1210.137
215	30	16	50	20	20	500	1210.137
216	30	16	50	20	20	800	1210.137
217	30	16	75	5	15	300	1098.069
218	30	16	75	5	15	500	1098.069
219	30	16	75	5	15	800	1098.069
220	30	16	75	5	17	300	1112.3415
221	30	16	75	5	17	500	1112.3415
222	30	16	75	5	17	800	1112.3415
223	30	16	75	5	20	300	1133.874
224	30	16	75	5	20	500	1133.874
225	30	16	75	5	20	800	1133.874

No.	Dia. Cm	length	C	Ø	?	load	Q allow. kN
226	30	16	75	10	15	300	1207.589
227	30	16	75	10	15	500	1207.589
228	30	16	75	10	15	800	1207.589
229	30	16	75	10	17	300	1237.072
230	30	16	75	10	17	500	1237.072
231	30	16	75	10	17	800	1237.072
232	30	16	75	10	20	300	1281.5916
233	30	16	75	10	20	500	1281.5916
234	30	16	75	10	20	800	1281.5916
235	30	16	75	20	15	300	1440.079
236	30	16	75	20	15	500	1440.079
237	30	16	75	20	15	800	1440.079
238	30	16	75	20	17	300	1502.14
239	30	16	75	20	17	500	1502.14
240	30	16	75	20	17	800	1502.14
241	30	16	75	20	20	300	1595.888
242	30	16	75	20	20	500	1595.888
243	30	16	75	20	20	800	1595.888
244	35	10	25	5	15	300	299.63
245	35	10	25	5	15	500	299.63
246	35	10	25	5	15	800	299.63
247	35	10	25	5	17	300	308.864
248	35	10	25	5	17	500	308.864
249	35	10	25	5	17	800	308.864
250	35	10	25	5	20	300	322.844
251	35	10	25	5	20	500	322.844
252	35	10	25	5	20	800	322.844
253	35	10	25	10	15	300	370.923
254	35	10	25	10	15	500	370.923
255	35	10	25	10	15	800	370.923
256	35	10	25	10	17	300	390.348
257	35	10	25	10	17	500	390.348
258	35	10	25	10	17	800	390.348
259	35	10	25	10	20	300	419.792
260	35	10	25	10	20	500	419.792
261	35	10	25	10	20	800	419.792
262	35	10	25	20	15	300	524.692
263	35	10	25	20	15	500	524.692
264	35	10	25	20	15	800	524.692
265	35	10	25	20	17	300	566.297
266	35	10	25	20	17	500	566.297
267	35	10	25	20	17	800	566.297
268	35	10	25	20	20	300	629.497
269	35	10	25	20	20	500	629.497
270	35	10	25	20	20	800	629.497

No.	Dia. Cm	length	C	Ø	⍰	load	Q allow. kN
271	35	10	50	5	15	300	543.866
272	35	10	50	5	15	500	543.866
273	35	10	50	5	15	800	543.866
274	35	10	50	5	17	300	553.42
275	35	10	50	5	17	500	553.42
276	35	10	50	5	17	800	553.42
277	35	10	50	5	20	300	567.872
278	35	10	50	5	20	500	567.872
279	35	10	50	5	20	800	567.872
280	35	10	50	10	15	300	617.476
281	35	10	50	10	15	500	617.476
282	35	10	50	10	15	800	617.476
283	35	10	50	10	17	300	637.519
284	35	10	50	10	17	500	637.519
285	35	10	50	10	17	800	637.519
286	35	10	50	10	20	300	667.907
287	35	10	50	10	20	500	667.907
288	35	10	50	10	20	800	667.907
289	35	10	50	20	15	300	776.344
290	35	10	50	20	15	500	776.344
291	35	10	50	20	15	800	776.344
292	35	10	50	20	17	300	819.349
293	35	10	50	20	17	500	819.349
294	35	10	50	20	17	800	819.349
295	35	10	50	20	20	300	884.586
296	35	10	50	20	20	500	884.586
297	35	10	50	20	20	800	884.586
298	35	10	75	5	15	300	795.702
299	35	10	75	5	15	500	795.702
300	35	10	75	5	15	800	795.702
301	35	10	75	5	17	300	805.63
302	35	10	75	5	17	500	805.63
303	35	10	75	5	17	800	805.63
304	35	10	75	5	20	300	820.632
305	35	10	75	5	20	500	820.632
306	35	10	75	5	20	800	820.632
307	35	10	75	10	15	300	872.046
308	35	10	75	10	15	500	872.046
309	35	10	75	10	15	800	872.046
310	35	10	75	10	17	300	892.774
311	35	10	75	10	17	500	892.774
312	35	10	75	10	17	800	892.774
313	35	10	75	10	20	300	924.173
314	35	10	75	10	20	500	924.173
315	35	10	75	10	20	800	924.173

No.	Dia. Cm	length	C	Ø	∂	load	Q allow. kN
316	35	10	75	20	15	300	1035.935
317	35	10	75	20	15	500	1035.935
318	35	10	75	20	15	800	1035.935
319	35	10	75	20	17	300	1080.169
320	35	10	75	20	17	500	1080.169
321	35	10	75	20	17	800	1080.169
322	35	10	75	20	20	300	1147.248
323	35	10	75	20	20	500	1147.248
324	35	10	75	20	20	800	1147.248
325	35	12	25	5	15	300	360.283
326	35	12	25	5	15	500	360.283
327	35	12	25	5	15	800	360.283
328	35	12	25	5	17	300	371.892
329	35	12	25	5	17	500	371.892
330	35	12	25	5	17	800	371.892
331	35	12	25	5	20	300	389.345
332	35	12	25	5	20	500	389.345
333	35	12	25	5	20	800	389.345
334	35	12	25	10	15	300	449.66
335	35	12	25	10	15	500	449.66
336	35	12	25	10	15	800	449.66
337	35	12	25	10	17	300	474.052
338	35	12	25	10	17	500	474.052
339	35	12	25	10	17	800	474.052
340	35	12	25	10	20	300	511.071
341	35	12	25	10	20	500	511.071
342	35	12	25	10	20	800	511.071
343	35	12	25	20	15	300	643.795
344	35	12	25	20	15	500	643.795
345	35	12	25	20	15	800	643.795
346	35	12	25	20	17	300	696.478
347	35	12	25	20	17	500	696.478
348	35	12	25	20	17	800	696.478
349	35	12	25	20	20	300	776.551
350	35	12	25	20	20	500	776.551
351	35	12	25	20	20	800	776.551
352	35	12	50	5	15	300	654.876
353	35	12	50	5	15	500	654.876
354	35	12	50	5	15	800	654.876
355	35	12	50	5	17	300	667.021
356	35	12	50	5	17	500	667.021
357	35	12	50	5	17	800	667.021
358	35	12	50	5	20	300	685.385
359	35	12	50	5	20	500	685.385
360	35	12	50	5	20	800	685.385

No.	Dia. Cm	length	C	Ø	∂	load	Q allow. kN
361	35	12	50	10	15	300	748.496
362	35	12	50	10	15	500	748.496
363	35	12	50	10	15	800	748.496
364	35	12	50	10	17	300	773.977
365	35	12	50	10	17	500	773.977
366	35	12	50	10	17	800	773.977
367	35	12	50	10	20	300	812.622
368	35	12	50	10	20	500	812.622
369	35	12	50	10	20	800	812.622
370	35	12	50	20	15	300	950.891
371	35	12	50	20	15	500	950.891
372	35	12	50	20	15	800	950.891
373	35	12	50	20	17	300	1005.628
374	35	12	50	20	17	500	1005.628
375	35	12	50	20	17	800	1005.628
376	35	12	50	20	20	300	1088.722
377	35	12	50	20	20	500	1088.722
378	35	12	50	20	20	800	1088.722
379	35	12	75	5	15	300	960.651
380	35	12	75	5	15	500	960.651
381	35	12	75	5	15	800	960.651
382	35	12	75	5	17	300	973.412
383	35	12	75	5	17	500	973.412
384	35	12	75	5	17	800	973.412
385	35	12	75	5	20	300	992.682
386	35	12	75	5	20	500	992.682
387	35	12	75	5	20	800	992.682
388	35	12	75	10	15	300	1058.703
389	35	12	75	10	15	500	1058.703
390	35	12	75	10	15	800	1058.703
391	35	12	75	10	17	300	1085.282
392	35	12	75	10	17	500	1085.282
393	35	12	75	10	17	800	1085.282
394	35	12	75	10	20	300	1125.501
395	35	12	75	10	20	500	1125.501
396	35	12	75	10	20	800	1125.501
397	35	12	75	20	15	300	1268.747
398	35	12	75	20	15	500	1268.747
399	35	12	75	20	15	800	1268.747
400	35	12	75	20	17	300	1325.22
401	35	12	75	20	17	500	1325.22
402	35	12	75	20	17	800	1325.22
403	35	12	75	20	20	300	1410.736
404	35	12	75	20	20	500	1410.736
405	35	12	75	20	20	800	1410.736

No.	Dia. Cm	length	C	Ø	B	load	Q allow. kN
406	35	16	25	5	15	300	487.445
407	35	16	25	5	15	500	487.445
408	35	16	25	5	15	800	487.445
409	35	16	25	5	17	300	504.1
410	35	16	25	5	17	500	504.1
411	35	16	25	5	17	800	504.1
412	35	16	25	5	20	300	529.342
413	35	16	25	5	20	500	529.342
414	35	16	25	5	20	800	529.342
415	35	16	25	10	15	300	616.55
416	35	16	25	10	15	500	616.55
417	35	16	25	10	15	800	616.55
418	35	16	25	10	17	300	651.835
419	35	16	25	10	17	500	651.835
420	35	16	25	10	17	800	651.835
421	35	16	25	10	20	300	705.501
422	35	16	25	10	20	500	705.501
423	35	16	25	10	20	800	705.501
424	35	16	25	20	15	300	898.905
425	35	16	25	20	15	500	898.905
426	35	16	25	20	15	800	898.905
427	35	16	25	20	17	300	975.513
428	35	16	25	20	17	500	975.513
429	35	16	25	20	17	800	975.513
430	35	16	25	20	20	300	1092.094
431	35	16	25	20	20	500	1092.094
432	35	16	25	20	20	800	1092.094
433	35	16	50	5	15	300	890.508
434	35	16	50	5	15	500	890.508
435	35	16	50	5	15	800	890.508
436	35	16	50	5	17	300	908.407
437	35	16	50	5	17	500	908.407
438	35	16	50	5	17	800	908.407
439	35	16	50	5	20	300	935.47
440	35	16	50	5	20	500	935.47
441	35	16	50	5	20	800	935.47
442	35	16	50	10	15	300	1028.462
443	35	16	50	10	15	500	1028.462
444	35	16	50	10	15	800	1028.462
445	35	16	50	10	17	300	1065.928
446	35	16	50	10	17	500	1065.928
447	35	16	50	10	17	800	1065.928
448	35	16	50	10	20	300	1122.657
449	35	16	50	10	20	500	1122.657
450	35	16	50	10	20	800	1122.657

No.	Dia. Cm	length	C	Ø	∅	load	Q allow. kN
451	35	16	50	20	15	300	1325.501
452	35	16	50	20	15	500	1325.501
453	35	16	50	20	15	800	1325.501
454	35	16	50	20	17	300	1405.502
455	35	16	50	20	17	500	1405.502
456	35	16	50	20	17	800	1405.502
457	35	16	50	20	20	300	1527.015
458	35	16	50	20	20	500	1527.015
459	35	16	50	20	20	800	1527.015
460	35	16	75	5	15	300	1314.193
461	35	16	75	5	15	500	1314.193
462	35	16	75	5	15	800	1314.193
463	35	16	75	5	17	300	1333.142
464	35	16	75	5	17	500	1333.142
465	35	16	75	5	17	800	1333.142
466	35	16	75	5	20	300	1361.693
467	35	16	75	5	20	500	1361.693
468	35	16	75	5	20	800	1361.693
469	35	16	75	10	15	300	1459.158
470	35	16	75	10	15	500	1459.158
471	35	16	75	10	15	800	1459.158
472	35	16	75	10	17	300	1498.24
473	35	16	75	10	17	500	1498.24
474	35	16	75	10	17	800	1498.24
475	35	16	75	10	20	300	1557.328
476	35	16	75	10	20	500	1557.328
477	35	16	75	10	20	800	1557.328
478	35	16	75	20	15	300	1767.992
479	35	16	75	20	15	500	1767.992
480	35	16	75	20	15	800	1767.992
481	35	16	75	20	17	300	1850.513
482	35	16	75	20	17	500	1850.513
483	35	16	75	20	17	800	1850.513
484	35	16	75	20	20	300	1975.108
485	35	16	75	20	20	500	1975.108
486	35	16	75	20	20	800	1975.108
487	40	10	25	5	15	300	367.704
488	40	10	25	5	15	500	367.704
489	40	10	25	5	15	800	367.704
490	40	10	25	5	17	300	380.077
491	40	10	25	5	17	500	380.077
492	40	10	25	5	17	800	380.077
493	40	10	25	5	20	300	398.783
494	40	10	25	5	20	500	398.783
495	40	10	25	5	20	800	398.783

No.	Dia. Cm	length	C	Ø	⍰	load	Q allow. kN
496	40	10	25	10	15	300	398.783
497	40	10	25	10	15	500	398.783
498	40	10	25	10	15	800	398.783
499	40	10	25	10	17	300	488.66
500	40	10	25	10	17	500	488.66
501	40	10	25	10	17	800	488.66
502	40	10	25	10	20	300	527.742
503	40	10	25	10	20	500	527.742
504	40	10	25	10	20	800	527.742
505	40	10	25	20	15	300	665.972
506	40	10	25	20	15	500	665.972
507	40	10	25	20	15	800	665.972
508	40	10	25	20	17	300	720.747
509	40	10	25	20	17	500	720.747
510	40	10	25	20	17	800	720.747
511	40	10	25	20	20	300	803.781
512	40	10	25	20	20	500	803.781
513	40	10	25	20	20	800	803.781
514	40	10	50	5	15	300	655.483
515	40	10	50	5	15	500	655.483
516	40	10	50	5	15	800	655.483
517	40	10	50	5	17	300	668.099
518	40	10	50	5	17	500	668.099
519	40	10	50	5	17	800	668.099
520	40	10	50	5	20	300	687.17
521	40	10	50	5	20	500	687.17
522	40	10	50	5	20	800	687.17
523	40	10	50	10	15	300	752.53
524	40	10	50	10	15	500	752.53
525	40	10	50	10	15	800	752.53
526	40	10	50	10	17	300	778.9
527	40	10	50	10	17	500	778.9
528	40	10	50	10	17	800	778.9
529	40	10	50	10	20	300	818.829
530	40	10	50	10	20	500	818.829
531	40	10	50	10	20	800	818.829
532	40	10	50	20	15	300	960.3
533	40	10	50	20	15	500	960.3
534	40	10	50	20	15	800	960.3
535	40	10	50	20	17	300	1016.362
536	40	10	50	20	17	500	1016.362
537	40	10	50	20	17	800	1016.362
538	40	10	50	20	20	300	1101.331
539	40	10	50	20	20	500	1101.331
540	40	10	50	20	20	800	1101.331

No.	Dia. Cm	length	C	Ø	⍰	load	Q allow. kN
586	40	12	25	20	15	300	813.018
587	40	12	25	20	15	500	813.018
588	40	12	25	20	15	800	813.018
589	40	12	25	20	17	300	881.722
590	40	12	25	20	17	500	881.722
591	40	12	25	20	17	800	881.722
592	40	12	25	20	20	300	985.984
593	40	12	25	20	20	500	985.984
594	40	12	25	20	20	800	985.984
595	40	12	50	5	15	300	785.018
596	40	12	50	5	15	500	785.018
597	40	12	50	5	15	800	785.018
598	40	12	50	5	17	300	800.904
599	40	12	50	5	17	500	800.904
600	40	12	50	5	17	800	800.904
601	40	12	50	5	20	300	824.918
602	40	12	50	5	20	500	824.918
603	40	12	50	5	20	800	824.918
604	40	12	50	10	15	300	907.31
605	40	12	50	10	15	500	907.31
606	40	12	50	10	15	800	907.31
607	40	12	50	10	17	300	940.545
608	40	12	50	10	17	500	940.545
609	40	12	50	10	17	800	940.545
610	40	12	50	10	20	300	990.889
611	40	12	50	10	20	500	990.889
612	40	12	50	10	20	800	990.889
613	40	12	50	20	15	300	1170.095
614	40	12	50	20	15	500	1170.095
615	40	12	50	20	15	800	1170.095
616	40	12	50	20	17	300	1240.935
617	40	12	50	20	17	500	1240.935
618	40	12	50	20	17	800	1240.935
619	40	12	50	20	20	300	1348.295
620	40	12	50	20	20	500	1348.295
621	40	12	50	20	20	800	1348.295
622	40	12	75	5	15	300	1140.181
623	40	12	75	5	15	500	1140.181
624	40	12	75	5	15	800	1140.181
625	40	12	75	5	17	300	1156.675
626	40	12	75	5	17	500	1156.675
627	40	12	75	5	17	800	1156.675
628	40	12	75	5	20	300	1181.573
629	40	12	75	5	20	500	1181.573
630	40	12	75	5	20	800	1181.573

No.	Dia. Cm	length	C	Ø	⍰	load	Q allow. kN
631	40	12	75	10	15	300	1266.794
632	40	12	75	10	15	500	1266.794
633	40	12	75	10	15	800	1266.794
634	40	12	75	10	17	300	1301.106
635	40	12	75	10	17	500	1301.106
636	40	12	75	10	17	800	1301.106
637	40	12	75	10	20	300	1353.02
638	40	12	75	10	20	500	1353.02
639	40	12	75	10	20	800	1353.02
640	40	12	75	20	15	300	1537.328
641	40	12	75	20	15	500	1537.328
642	40	12	75	20	15	800	1537.328
643	40	12	75	20	17	300	1610.02
644	40	12	75	20	17	500	1610.02
645	40	12	75	20	17	800	1610.02
646	40	12	75	20	20	300	1719.951
647	40	12	75	20	20	500	1719.951
648	40	12	75	20	20	800	1719.951
649	40	16	25	5	15	300	591.442
650	40	16	25	5	15	500	591.442
651	40	16	25	5	15	800	591.442
652	40	16	25	5	17	300	613.354
653	40	16	25	5	17	500	613.354
654	40	16	25	5	17	800	613.354
655	40	16	25	5	20	300	646.52
656	40	16	25	5	20	500	646.52
657	40	16	25	5	20	800	646.52
658	40	16	25	10	15	300	760.668
659	40	16	25	10	15	500	760.668
660	40	16	25	10	15	800	760.668
661	40	16	25	10	17	300	806.813
662	40	16	25	10	17	500	806.813
663	40	16	25	10	17	800	806.813
664	40	16	25	10	20	300	876.802
665	40	16	25	10	20	500	876.802
666	40	16	25	10	20	800	876.802
667	40	16	25	20	15	300	1127.644
668	40	16	25	20	15	500	1127.644
669	40	16	25	20	15	800	1127.644
670	40	16	25	20	17	300	1226.887
671	40	16	25	20	17	500	1226.887
672	40	16	25	20	17	800	1226.887
673	40	16	25	20	20	300	1377.607
674	40	16	25	20	20	500	1377.607
675	40	16	25	20	20	800	1377.607

No.	Dia. Cm	length	C	Ø	☐	load	Q allow. kN
721	40	16	75	20	15	300	2122.084
722	40	16	75	20	15	500	2122.084
723	40	16	75	20	15	800	2122.084
724	40	16	75	20	17	300	2227.734
725	40	16	75	20	17	500	2227.734
726	40	16	75	20	17	800	2227.734
727	40	16	75	20	20	300	2387.297
728	40	16	75	20	20	500	2387.297
729	40	16	75	20	20	800	2387.297

Table (3-1)

3-3-The basic problem

The basic problem is a single precast pail (d=0.3m) and (L=10m) driven in a soil deposit with cohesion (c=25 KN/m^2) angel of internal friction (ϕ=3) and total unit weight (γ=15 KN/m^3) the allowable bearing capacity of the pail is 236.212 KN

Basic problem

C=25 , ϕ =5 , γ =15 , Dim = 30 , length =10 (Q- allowable =236.215)

1-(c-effect)

C=50, ϕ =5 , γ =15 , Dim = 30 , length =10 (Q- allowable =438.212)

C=75 , ϕ =5 , γ =15 , Dim = 30 , length =10 (Q- allowable =648.684)

2-(ϕ)

C=25 , ϕ = 10 , γ =15 , Dim = 30 , length =10 (Q- allowable =286.925)

C=25 , ϕ =20 , γ =15 , Dim = 30 , length =10 (Q- allowable =397.764)

figure (3-2) shown the relationship between the improvement ratio (im) and the cohesion (c) ; it shown that by increasing the cohesion the improvement ratio will increase

c-effect	Q-allowable	Im
25	236.215	1
50	438.212	1.855
75	648.684	2.746

Table (3-2)

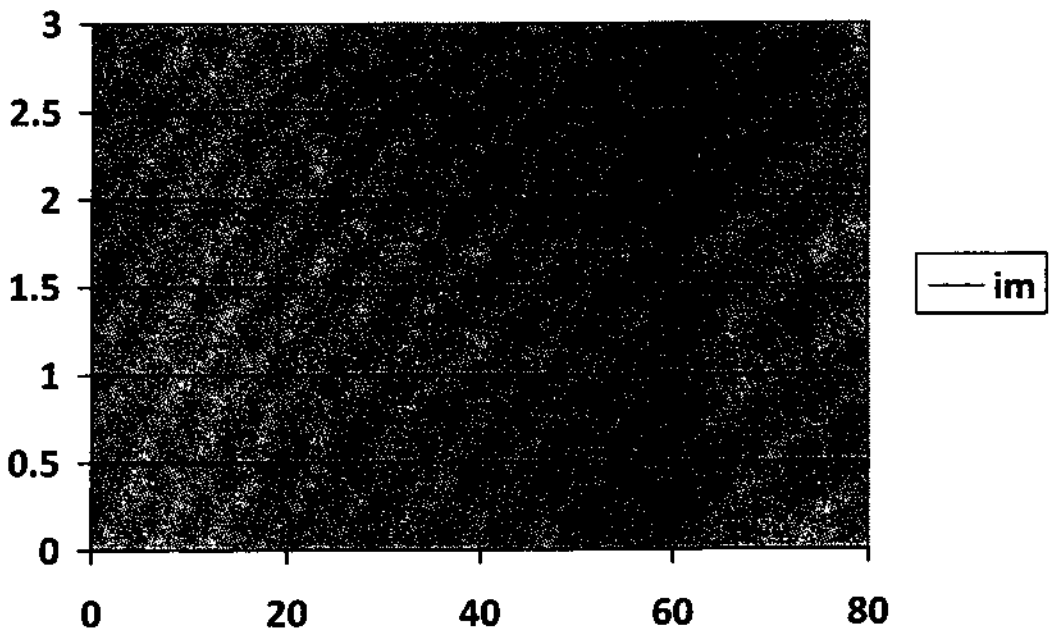

Figure 3-2

3-4-2 The effect of the angle of internal fraction (ϕ)

Three different values of the angle of internal fraction was adopter (5,10,20); and the value of the allowable bearing capacity is shown in the table (3-3)

the value of the allowable bearing capacity shown that ; by increasing the value of the angle of internal fraction the value of the bearing capacity will increasing as shown in the table (3-3)

figure (3-3) shown the relationship between the improvement ratio (im) and the angle of internal fraction (ϕ); it shown that by increasing the angle of internal fraction the improvement ratio will increase

ϕ	Q-allowable	Im
5	236.215	1
10	286.925	1.214
20	397.764	1.683

Table (3-3)

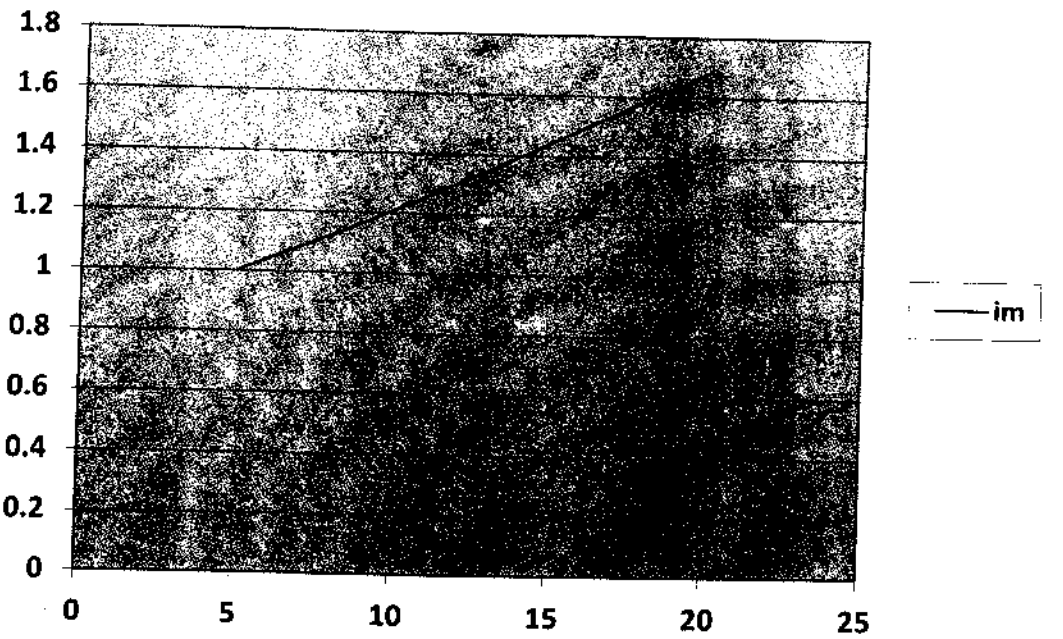

Figure 3-3

3-4-3 The effect of the total unit weight (Yt)

Three different values of the total unit weight was adopter (15,17,20); and the value of the allowable bearing capacity is shown in the table (3-4)

the value of the allowable bearing capacity shown that ; by increasing the value of the total unit weight the value of the bearing capacity will increasing as shown in the table (3-4)

figure (3-4) shown the relationship between the improvement ratio (im) and the total unit weight (Y); it shown that by increasing the total unit weight the improvement ratio will increase.

Y	Q-allowable	im
15	236.215	1
17	242.753	1.027
20	252.668	1.069

Table (3-4)

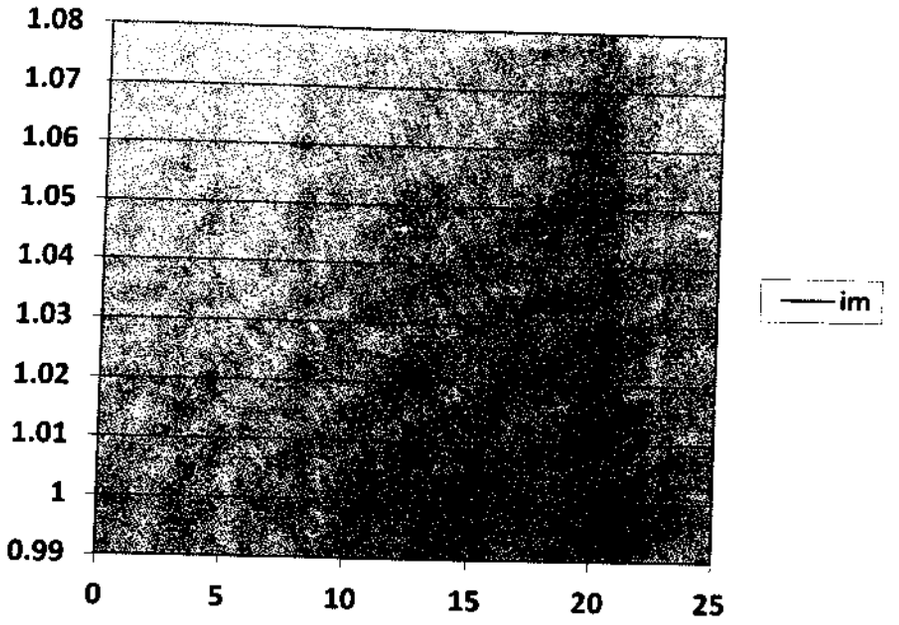

Figure 3-4

3-4-4 The effect of the diameter (d)

Three different values of the diameter was adopter (30,35,40); and the value of the allowable bearing capacity is shown in the table (3-5)

the value of the allowable bearing capacity shown that ; by increasing the value of the diameter the value of the bearing capacity will increasing as shown in the table (3-5)

figure (3-5) shown the relationship between the improvement ratio (im) and the diameter (d); it shown that by increasing the diameter the improvement ratio will increase

dim	Q-allowable	Im
30	236.215	1
35	299.630	1.268
40	367.704	1.556

Table (3-5)

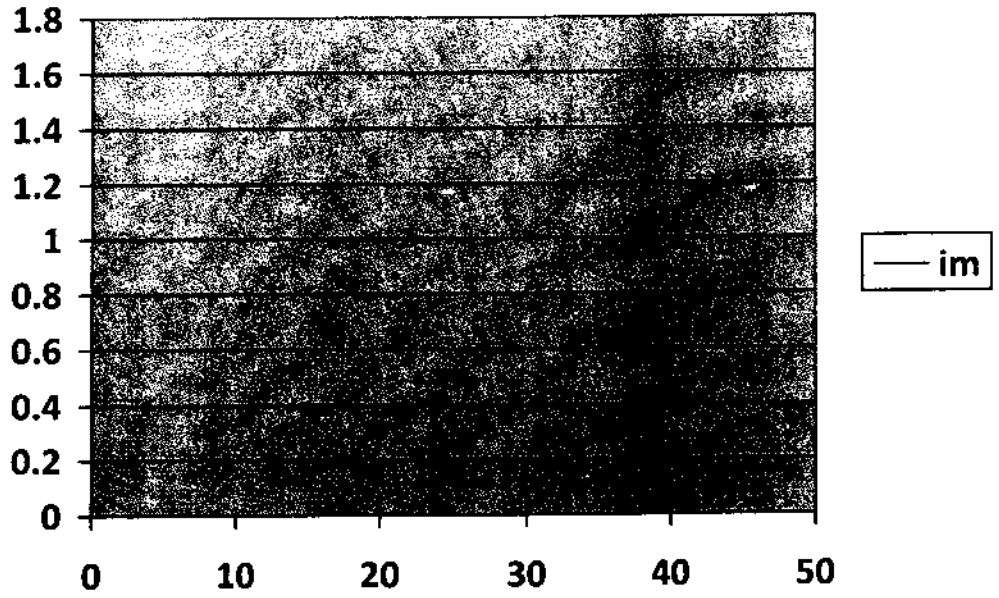

Figure 3-5

3-4-5 The effect of the length (L)

Three different values of the length (L) was adopter (10,12,16); and the value of the allowable bearing capacity is shown in the table (3-6)

the value of the allowable bearing capacity shown that ; by increasing the value of the length the value of the bearing capacity will increasing as shown in the table (3-6)

figure (3-6) shown the relationship between the improvement ratio (im) and the length (L) ; it shown that by increasing the length (L) the improvement ratio will increase

length	Q-allowable	Im
10	236.215	1
12	285.639	1.209
16	390.782	1.654

Table (3-6)

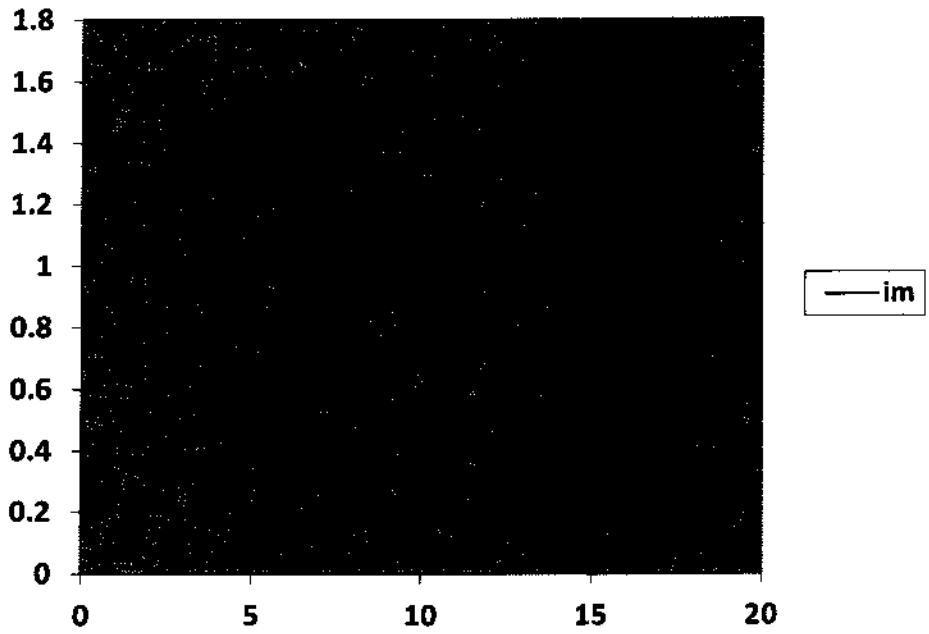

Figure 3-6

Chapter four

Abstract

CHAPTER FOUR

Abstract

In this research a single precast concrete pile with embedment depth (10m) and diameter (0.3m) was analized to fiend the allowable bearing capacity with factor of safety equal to (1.5-2)

The parameter study include five parameters which is (c; Φ; γ; L; d) and the improvement ratio (im) which is between (1-2.746)

It is shown that increasing the parameters lead to increasing in the bearing capacity.

A computer program which is named Allpile was used in the analies

References

Bowels , J.E.(1982) Foundation Analysis and Design (3rd ed) McGraw-Hill Kogakusha. Ltd, Pp (592-616).

Graig. R.F.(1987)Soil Mechanics (4th ed.). Van Nostrand Renhold (UK).Pp(320-328).

Lambe. T. W. & R.V. Whitman (1979) Soil Mechanics (2nd ed). John Wiley & Sons. Inc. pp(489-513).

Peck. R. B. et al.(1974) foundation engineering (2nd ed). John willey and sons .lnc .pp(212-286)

Poulos. H . G and E. H. davis (1980) pail foundation. John willey and sons .lnc .pp(18-30)