Chapter 5
Soil Stabilization and Compaction

5. Soil Stabilization and Compaction

5.1. Introduction:

Soils are used to support structures, to support pavement for highways, airport and dams.

Some types of soils may be used in their natural state, while others may be excavated, processed, and compacted in order to serve their purpose, so the properties, characteristics, and behavior of soil must be known in order to design or construct projects involving the use of soils.

5.2. Terms:

Back Fill	Material used in refilling a cut or other excavation.
Bank	A mass of soil rising above an average level, or any soil which is dug from the original position.
Bank Measure	A measure of the volume of earth in its natural position before it is excavated.
Base	The layer of material in a roadway or airport runway section on which the pavement is placed.
Binder	Fine aggregate or other materials which fill voids and hold coarse aggregate together.
Compacted Volume	A measurement of the volume of a soil often it has been subjected to compaction.
Stabilize	To make soil firm and to prevent it from moving.
Sub Base	The layer of selected materials placed to furnish strength to the base of a road. And the material used to replace the unstable natural soil is generally called (sub base material), and when compacted it is known as the sub base.
Sub Grade	The surface produced by grading native earth, or cheap imported material which serves as a base for more expensive paving.

5.3. Properties of Soils:-

There are some properties have a direct effect on the ease or difficulty of handling earth , the selection of equipment, and the production rates of equipment.

5.3.1. Swell and Shrinkage

When the volume of earth increases because of losing, this increase is defined as ***swell***. It is expressed as a percent of the original undisturbed volume.

If the earth removed from a hole having a volume of 1 Cu Yd. is found to have a loose volume of 1.25 Cu Yd. The gain in volume is 0.25 Cu Yd., or 25 percent when earth is placed in a fill and compacted under modern construction methods, it will usually have a smaller volume than in its original condition. This reduction in volume is the result of an increase in the density. This reduction in volume is defined as ***shrinkage***.

5.4. Soil Stabilization

Stabilization may be applied to the soil in its natural position or as it is placed in a fill. Also, stabilization may be applied to the sub grade, sub base, or base materials.

5.4.1. Methods of Soils Stabilization Include the Following Operations:-

1. Blending and mixing heterogeneous soils to produce more homogenous soils. They may be mixed the soil during excavation by using equipment such as a power shovel or a deep-cutting belt loader to excavate through several layers in one operation. When such material is placed on a fill, it may be subjected to further blending by several passes with a disk harrow.

2. Stabilizing soils with hydrated lime: The plasticity index of soil with high clay content can be reduced by incorporating hydrated lime into the soil

using a disk harrow or other stabilizing equipment such as the pulverize. The explanation for this soil improvement lies in a Base Exchange reaction occurring between the lime and clay particles, which cause the clay to agglomerate and become more granular and porous. After compaction a cementing reaction occurs between the lime and free silica and alumina in the clay, resulting in a substantial improvement in the strength and stability of the soil.

3. Asphalt-soil stabilization: Asphalt such as Mc-3 or Rc-3 are mixed with granular soils, in amounts of 5 to 7 percent of the volume of soil. To produce more stable soil. The moisture content of the soil must be low at the time the asphalt is added, also the volatile oils must be allow to evaporate from the bitumen before finishing and rolling the material. Soil treated in this manner may be used as finished surface for low traffic density secondary roads or as base courses for high-type pavement.

4. Cement-soil stabilization: This method is economical and convenient where the soil is clay or silt and native deposits of gravel or rock are scarce. The ratio of cement to soil is from 5 to 7 percent by weight.

5.4.2. Methods Involved:

- Spreading the Portland cement uniformly over the surface of the soil.
- Mixing the cement into the soil with pulverize-type machine
- Fine grading and compaction.
- Sprinkle the surface with water during the processing operation (if the moisture content of soil is low)
- Compacted within 30 min after the material is mixed, using tamping- or pneumatic-tired rollers, followed by final rolling with smooth-wheel rollers.

5.5. Specifications for Compacting Soils

There may be differences of opinion regarding the degree of compaction; the owner desires the densest and stable embankment possible at the least cost. The contractor desires to satisfy the requirement of the specifications of the lowest construction cost.

Specifications may be one of the following types:

- Method only.
- Method and end result.
- Suggested method and end result.
- End result only.

5.5.1. Method Only Specification:-

In this method the specifications are:

- The contractor placing the soil in lifts of specified depth.
- The soil having as specified moisture content.
- With specified type of roller having specified weight is to be used to compact the soil.
- By making a specified number of passes over each lift
- The contractor will have no choice except to comply with the requirement of specifications. The owner in this method obligated to accept the responsibility of the result.

5.5.2. Method and End Result Specifications:-

This is not a satisfactory specification.

It is probable that a specified method of compacting soil will result in excessive costs because compaction operations will be continued after adequate compaction is attained, or compaction may be discontinued before adequate density is attained. And this method may not permit a contractor to make use of

methods which he has found to be economical and effective. And this method cause to spend an unnecessarily high cost for the project.

5.5.3. Suggested Method and Result Specifications

This type seems to be more desirable than two types above. It leaves a contractor free to select any reasonable method and equipment which will provide the required density at a significant reduction in costs.

And this type can serve as a guide to a less – experienced contractor.

5.5.4. End Resulting Specifications

There is a policy toward using this type.

The owner is interested in end result, for example, the specifications dictate that the soil shall be compacted to 95% Relative density and the contractor should be selecting his own methods which may be substantially less expensive than other prescribed methods.

5.6. Types of Compacting Equipment:-

Compaction is attained by applying energy to a soil by one or more of the following methods:

1. Kneading action
2. Static weight
3. Vibration
4. Impact

Compacting equipment are available as follows:

1. Tamping rollers.
2. Smooth-wheel rollers.
3. Pneumatic-tired rollers.

4. Vibrating rollers, including tamping, smooth, wheel, and pneumatic.
5. Self-propelled vibrating plates and/or shoes.
6. Manually propelled vibrating plates.
7. Manually propelled compactors.

1. Tamping Rollers

- T.R are of the sheep's-foot type.
- May be towed by a tractor or self-propelled.
- Consist of a hollow steel drum.
- Outer surface has welded a number of projecting steel feet of varying lengths.
- May consist of one or more drums mounted on one or more horizontal axles.
- Weight of a drum may be varied by adding water or sand to produce pressure under the feet up to 750 psi or more.
- As a roller moves over surface, the feet penetrate the soil to produce a kneading action to mix and compact the soil from the bottom to the top of the layer.
- The penetration of feet decreases with repeated passage of the roller over the surface.
- This type is quite effective in compacting clays and mixtures of sand and clay.
- Depth of a layer of soil to be compacted is limited to the length of the feet.

2. Smooth-Wheel Rollers:-

- Three wheel two-axle rollers.
- Front wheel for steering.
- Two rear wheels for driving.
- Rolls are steel drums may be ballasted with water or sand to increase the weights 14-20 tons means the minimum weight of machine is 14 ton and can be ballasted to give a maximum weight of 20 tons.

- Effective in compacting granular soils such as sand, gravel, crushed stone, and also used in smoothing surface of soil that have been compacted by tamping rollers

3. Pneumatic-Tired Rollers:-

- Surface rollers which apply the principle of kneading action to effect compaction below the surface.
- Have two axels with four to nine tires on each axel.
- Rear wheels are travel over the surface between the front wheels.
- Because of the heavy load and high tire pressures they are capable of compacting all types of soils to greater depth.

5.7. Pressure Bulb Theory of Load Distribution:-

This theory is related to the distribution of a load, and thus to the unit soil pressure, when the load is applied to the soil through a circular object. Because the contact area between a tire and the ground approximates a circle, the theory can be applied to pressures in the soil under tires with slight modifications.

Figure (5.1) illustrates the ratios of unit pressures to ground contact pressure at varying depths below the surface of the ground.

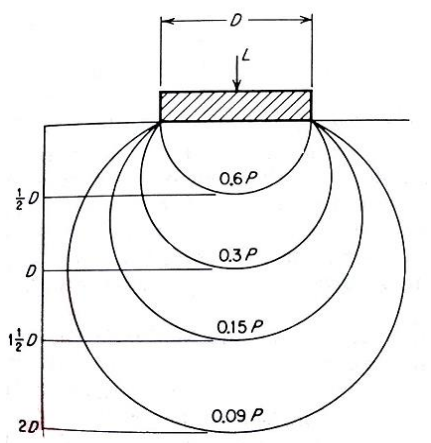

D= Diameter of the Circle
L=Load
A=Area of Circle
P=Unit Pressure under Area

Figure (5.1) – Vibration in Pressure with Depth under a Load

Example:-

D=10in

A= 78.5 sq.in

L=4.710 Ib

$$P = \frac{4.710}{78.5} = 60 \ \ psi$$

Distance under Surface, in	Factor	Soil Pressure, Psi
0	1.00	60.0
5	0.60	36.0
10	0.30	30.0
15	0.15	9.0
20	0.09	5.4