8. To calculate the magnitude of the internal couple, it is necessary to know the lever-arm distance between N_c and N_T.

The location of N_c will be at the centroid of the compression area. The centroid may be located a distance $\bar{y}$ below the top fiber, as follows:

$$\bar{y} = \frac{\Sigma(Ay)}{\Sigma A}$$

$a = h + h_f$

$h = a - h_f$

$h = 12.4$

$A_1 = 800(50) = 40{,}000\ mm^2$ $\quad A_2 = 250(62.4-50) = 3100\ mm^2$

$$\bar{y} = \frac{40{,}000(25) + 3100(50+6.2)}{40{,}000 + 3{,}100} = 27.2\ mm \qquad (h_f + \tfrac{h}{2})$$

$\therefore z = d - \bar{y} = 300 - 27.2 = 272.8\ mm$

9. $M_n = N_T z = 2121(420)2728 = 2.4302 \times 10^8\ N.mm$

$= 243.02\ kN.m$ $\quad \times 10^{-6}$

$M_R = \phi M_n$

$\varepsilon_t = 0.003\left(\frac{d_t \beta_1}{a} - 1\right) = 0.003\left(\frac{300 * 0.85}{62.4} - 1\right) = 0.009 > 0.005$

$\therefore \phi = 0.9$

$M_R = 0.9(243.02) = 218.7\ kN.m$

Example:

For the T-beam shown in figure, determine the dependable resisting moment strength M_R if $f'_c = 21$ MPa and $f_y = 300$ MPa. The beam span length is 7 m.

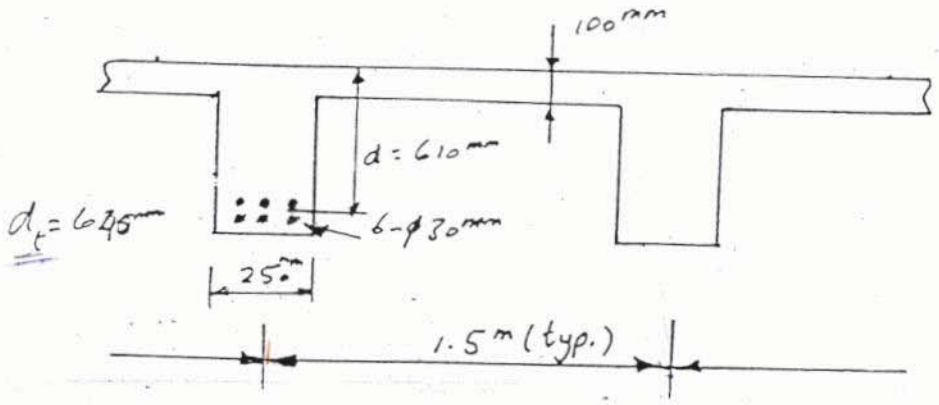

1. Find the effective flange width:

$\frac{1}{4}$ span length $= \frac{7 \times 1000}{4} = 1750$ mm

$b_w + 16h_f = 250 + 16(100) = 1850$ mm

Beam spacing $= 1500$ mm

$\therefore$ Use $b = 1500$ mm.

2. Assume that the steel yields and find N_T.

$A_s = \frac{\pi}{4}(d_b)^2 * 4$

$N_T = A_s f_y = 4241(300) = 1{,}272{,}300$ N $= 1{,}272.3$ kN

3. The flange itself is capable of furnishing a compression force of

$N_C = (0.85 f'_c) b h_f = 0.85(21)(1500)(100) = 2{,}677{,}500$ N

$= 2{,}677.5$ kN

4. Since $N_c > N_T$, the flange furnishes sufficient compression area and the stress block lies entirely in the flange. Therefore, analyze the T-beam as a rectangular T-beam of width $b = 1500$ mm.

5.
$$\rho = \frac{A_s}{b_w d} = \frac{4241}{250(610)} = 0.0159$$

$$\rho_{min} = \frac{1.4}{f_y} = \frac{1.4}{300} = 0.0047$$

$$\rho > \rho_{min} \quad (ok)$$

6.
$$a = \frac{A_s f_y}{(0.85 f'_c) b} = \frac{4241(300)}{0.85(21)1500} = 47.5 \text{ mm}$$

$N_T < N_c$ ...

$$M_n = N_T\left(d - \frac{a}{2}\right) = 1{,}272{,}300\left(610 - \frac{47.5}{2}\right) = 7.459 \times 10^8 \text{ N.mm}$$

$$M_n = 745.9 \text{ kN.m}$$

$$\varepsilon_t = 0.003\left(\frac{d_t \beta_1}{a} - 1\right) = 0.003\left(\frac{640(0.85)}{47.5} - 1\right)$$

$$= 0.0304 \gg 0.005$$

$$\phi = 0.9$$

$$M_R = \phi M_n = 0.9(745.9) = 671.3 \text{ kN.m}$$

OR Actual $\rho = \frac{A_s}{bd} = \frac{4241}{1500(610)} = 0.00463$

$$M_R = \phi b d^2 R_n$$

$$R_n = \rho f_y\left(1 - \tfrac{1}{2}\rho m\right)$$

$$m = \frac{f_y}{0.85 f_c'} = \frac{300}{0.85(21)} = 16.80672$$

$$R_n = 0.00463(300)\left(1 - \tfrac{1}{2}(0.00463)(16.80672)\right) = 1.33496 \text{ MPa}$$

$$M_R = \phi b d^2 R_n = 0.9(1500)(610)^2(1.33496)$$

$$= 671.3 \text{ kN.m}$$

Analysis of Beams having Irregular Cross Sections

Beams having other than rectangular and T- shaped cross sections are common, particularly in structures utilizing precast elements. The approach for the analysis of such beams is to utilize the internal couple in the normal way, taking into account any variation in the shape of the compressive stress block. The method is similar to that used for true T- beam analysis.

Example:

Find the dependable resisting moment strength M_R for the beam shown. $f_y = 300$ MPa and $f_c' = 20$ MPa.

1. The effective flange width may be considered to be 200 mm.

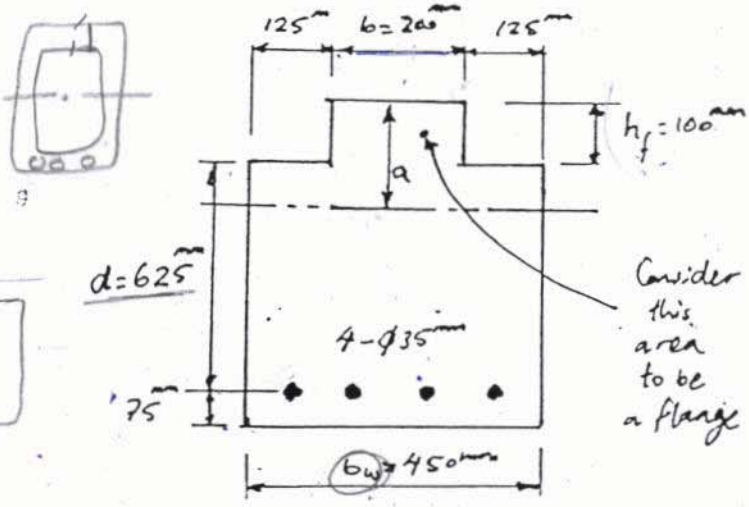

2.

$$N_T = A_s f_y = 3848\,(300) = 1154400\ N = 1154.4\ kN$$

3. Determine the amount of compression that the $200^{mm} \times 100^{mm}$ area is capable of furnishing.

$$N_c = (0.85 f'_c) h_f b$$

$$= (0.85)(20)(100)(200) = 340{,}000\ N = 340\ kN$$

4. Since $N_T > N_c$, the compressive stress block must extend below the ledges to provide the remaining compression.

$$a = \frac{N_T - N_c}{(0.85 f'_c) b_w} + h_f$$

$$= \frac{(1154.4 - 340)\,10^3}{0.85(20)(450)} + 100 = 206.5\ mm \text{ from top of beam}$$

$h = a - h_f$

5.

$$\rho_{min} = \frac{1.4}{f_y} = \frac{1.4}{300} = 0.0047$$

$$\rho = \frac{A_s}{b_w d} = \frac{3848}{450(625)} = 0.01368 > 0.0047 \quad (ok)$$

$$\varepsilon_t = 0.003\left(\frac{d_t \beta_1}{a} - 1\right) = 0.0047$$

6. Find the location of N_c at the centroid of the compression area.

$$\bar{y} = \frac{\Sigma A y}{\Sigma A}$$

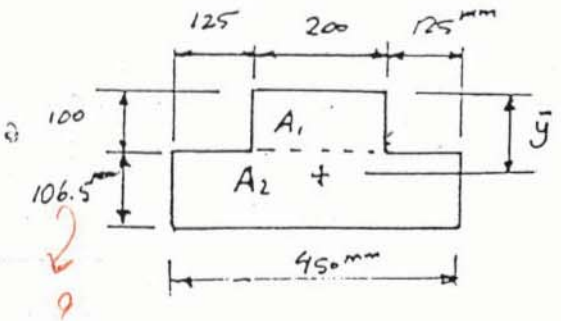

$A_1 = 200(100) = 20{,}000\ mm^2$

$A_2 = 450(106.5) = 47{,}925\ mm^2$

$a = h_f + \frac{h}{2}$

$$\bar{y} = \frac{20{,}000(50) + 47{,}925\left(100 + \frac{126.5}{2}\right)}{20{,}000 + 47{,}925} = 122.8 \text{ mm}$$

$h_f + \frac{h}{2}$

from which the lever arm z may be calculated.

$$z = d - \bar{y} = 625 - 122.8 = 502.2 \text{ mm}$$

7.

$$M_n = N_T z = 1{,}154{,}400\ (502.2) = 5.797 \times 10^8 \text{ N.mm}$$

$$= 579.7 \text{ kN.m}$$

8.

$$\varepsilon_t = 0.003\left(\frac{d_t \beta_1}{a} - 1\right) = 0.003\left(\frac{625(0.85)}{206.5} - 1\right) = 0.0047 < 0.005$$

$$\phi = 0.48 + 83\varepsilon_t = 0.48 + 83(0.0047) = 0.87$$

$$M_R = \phi M_n = 0.87\ (579.7) = 504.3 \text{ kN.m}$$

Summary of Procedure for Analysis of T-beams (for Flexure)

1. Establish the effective flange width based on ACI criteria.

2. Assume that the tensile steel yields and compute the total tension.

$$N_T = A_s f_y$$

3. Compute the magnitude of the compression that the flange itself capable of furnishing.

$$N_c = 0.85 f_c' b h_f$$

4. If $N_T > N_c$, the beam will behave as a true T-beam and the remaining compression, which equals $N_T - N_c$, will be furnished by additional web area. If $N_T < N_c$, the beam will behave as a rectangular beam of width b.

True T-beam

5. Locate the bottom of the compressive stress block in the beam web.

$$a = \frac{N_T - N_c}{0.85 f_c' b_w} + h_f$$

6. Check ρ_{min} and ductility

$$\rho_{min} = \frac{1.4}{f_y} \qquad \text{Actual } \rho = \frac{A_s}{b_w d}$$

$$\varepsilon_t = 0.003 \left(\frac{d_t \beta_1}{a} - 1 \right)$$

Actual $\rho > \rho_{min}$ & $\varepsilon_t > 0.004$

7. Locate the centroid of total compressive area using the relationship

$$\bar{y} = \frac{\Sigma \bar{A} y}{\Sigma A}$$

from which

$$z = d - \frac{a}{2}$$

8. Compute the resisting moment M_R.

$$M_R = \phi N_c z \quad \text{or} \quad \phi N_T z$$

Rectangular T-beam

5. Find a.

$$a = \frac{A_s f_y}{0.85 f_c' b}$$

6. check ρ_{min} and ductility

$$\rho_{min} = \frac{1.4}{f_y} \qquad \text{Actual } \rho = \frac{A_s}{b_w d}$$

$$\varepsilon_t = 0.003\left(\frac{d_t \beta_1}{a} - 1\right)$$

Actual $\rho > \rho_{min}$ & $\varepsilon_t > 0.004$

7. Compute the resisting moment M_R.

$$M_R = \phi N_c z \quad \text{or} \quad \phi N_T z$$

$$z = d - \frac{a}{2}$$

T-Beam Design

- Quantities that need to be determined in the design of a T-beam are:
  - flange dimensions:
    - effective width, b
    - thickness, h_f
  - web dimensions:
    - width, b_w
    - height
  - area of tension steel, A_s.

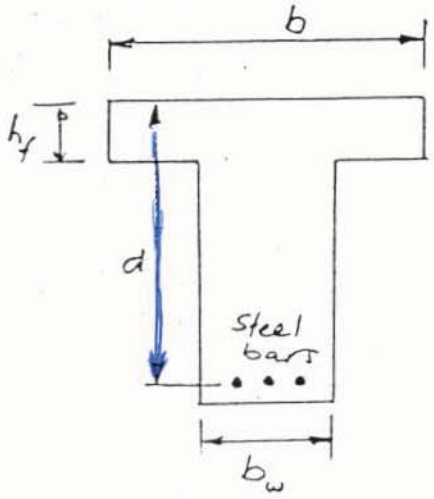

- In normal situations, the flange thickness, is determined by the design of the slab, and the web size is determined by the shear and moment requirements at the end of the supports for continuous beam.
- Column size sometimes dictate web width.
- ACI code dictates permissible effective flange width, b.
- The flange itself generally provides more than sufficient compression area; therefore the stress block usually lies completely in the flange.
- Thus, most T-beams are only wide rectangular beams with respect to flexural behavior.

T- beam Design

- The recommended method for design T- beams will depend on whether the T-beam behaves as a rectangular T- beam or as a true T- beam. If the T-beam is determined to be a rectangular T-beam, the design procedure is the same as for tensile reinforced rectangular beam where the size of the cross section is known. If the T-beam is determined to be a true T-beam, an approximate design, followed by analysis, may be used.

Example: Design the T-beam for the floor shown in Fig. below. The floor has a 100mm slab supported by 6.7 m span length beams cast monolithically with the slab. Beams are 2.4 m on center and have a web width b_w of 300mm and a total depth = 550 mm; f'_c = 21 MPa and f_y = 420 MPa. Service load moments are: M_{DL} = 220 kN.m (includes the weight of the floor system) and M_{LL} = 82 kN.m.

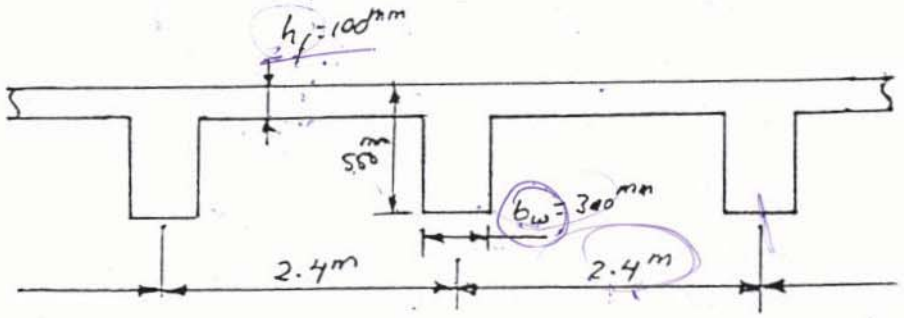

1. Establish the design moment

$$M_u = 1.2 M_{DL} + 1.6 M_{LL}$$

$$= 1.2(220) + 1.6(82) = 395.2 \text{ kN.m}$$

2. Assume an effective depth $d = h - 75^{mm}$

$$d = 550 - 75 = 475^{mm}$$

3. Find the effective flange width, b:

$\frac{1}{4}$ span length $= \frac{1}{4}(6.7 \times 10^3) = 1675$ mm (controls)

$b_w + 16 h_f = 300 + 16(100) = 1900$ mm

beam spacing $= 2.4 \times 10^3 = 2400$ mm

Therefore, use $b = 1675^{mm}$. (smallest)

4. True T-beam OR Rectangular T-beam

$$M_{ef} = \phi(0.85 f'_c) b h_f \left(d - \frac{h_f}{2}\right)$$

$$= 0.9(0.85)(21)(1675)(100) \cdot \left(475 - \frac{100}{2}\right)$$

$$= 1.144 \times 10^9 \text{ N.mm} = 1144 \text{ kN.m}$$

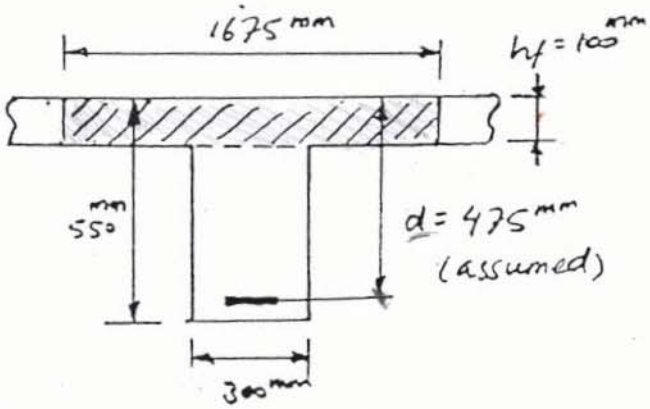

Since $M_{ef} > M_u (395.2 \text{ kN.m})$, therefore $a < h_f$ and the total effective flange need not be completely used in compression.

The beam can be analyzed as a rectangular T-beam

5. Design as a rectangular beam with b and d as known values.

$$\text{required } R_n = \frac{M_u}{\phi b d^2} = \frac{395.2 \times 10^6}{0.9(1675)(475)^2} = 1.16191 \ \frac{N}{mm^2}$$

$$m = \frac{f_y}{0.85 f'_c} = \frac{420}{0.85(21)} = 23.52941$$

$$\rho = \frac{1}{m}\left(1 - \sqrt{1 - \frac{2 m R_n}{f_y}}\right) = 0.00286$$

6.

$$A_s = \rho b d = 0.00286(1675)(475) = 2278 \ mm^2$$

7. Select steel bars:

$$n \frac{\pi}{4}(d_b)^2 = 2278$$

$d_b = 32^{mm} \longrightarrow n = 3$

Use $3-\phi 32^{mm}$ bars ($A_s = 2413 \ mm^2$)

- minimum $b_w = \underset{d_b}{3(32)} + \underset{s \leq d_b \ \leq 25mm}{2(32)} + \underset{d_s}{2(10)} + \underset{c=cover}{2(40)} = 260^{mm} < 300^{mm}$ (ok)

- check the actual d:

$$d = \underset{h}{550} - \underset{cover}{40} - \underset{d_s}{10} - \underset{\frac{d_b}{2}}{\frac{32}{2}} = 484 \ mm > d \text{ assumed}$$

ok

< d assumed بحاله

$d = h - 95$ or 100 ونعيد الحل نستخدم

8. Check ρ_{min}

$$\rho_{min} = \frac{1.4}{f_y} = 0.00333$$

$$\text{Actual } \rho = \frac{A_s}{b_w d} = \frac{2413}{300(484)} = 0.01662 > \rho_{min} \ \text{ok}$$

9. Check strain limits for tension-controlled:

$$a = \frac{A_s f_y}{0.85 f'_c b} = \frac{2413(420)}{0.85(21)1675} = 33.9\text{ mm} < h_f \quad \underline{ok}$$

$$\varepsilon_t = 0.003\left(\frac{\beta_1 d_t}{a} - 1\right) = 0.003\left(\frac{0.85(484)}{33.9} - 1\right) = 0.033 \gg 0.005$$

ok

10. Sketch the design

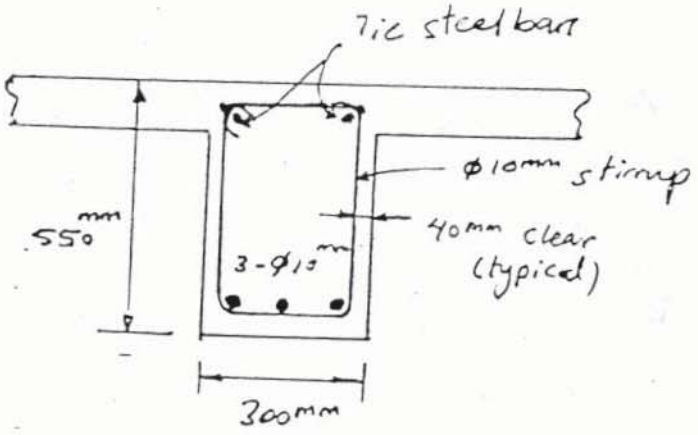

Example:

Design a T-beam having a cross section as shown. Assume that the effective flange width is acceptable. The T-beam will carry a total design moment M_u of 460 kN·m, f'_c = 21 MPa and f_y = 420 MPa. Use 40mm cover and ϕ10 mm stirrups.

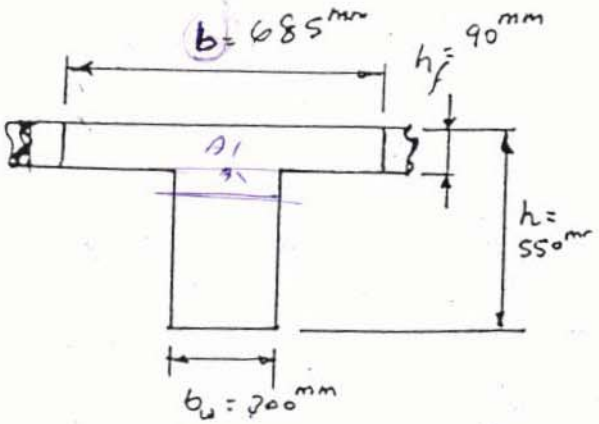

1. The design moment

M_u = 460 kN·m (given) OK!

2. Assume an effective depth

$$d = h - 75^{mm} = 475^{mm}$$

3. The effective flange width = 685 mm (given)

4. Determine M_{Rf} assuming the flange to be completely in compression.

$$M_{Rf} = \phi (0.85 f'_c) b h_f (d - \frac{h_f}{2})$$

$$= 0.9(0.85)(21)(685)(90)(475 - \frac{90}{2})$$

$$= 4.259 \times 10^8 \text{ N.mm} = 425.9 \text{ kN.m}$$

5. $M_{Rf} < M_u$ (460 kN.m) ; therefore, the beam must behave as a true T-beam.

6. Find the approximate lever-arm distance for the internal couple:

$$z = d - \frac{h_f}{2} = 475 - \frac{90}{2} = 430^{mm}$$

7. Find the approximate required A_s,

$$A_s = \frac{M_u}{\phi f_y z} = \frac{460 \times 10^6}{0.9(420)(430)} = 2830 \text{ mm}^2$$

8. Select the bars.

$$n \frac{\pi}{4} (d_b)^2 = 2830$$

$d_b = 35^{mm} \longrightarrow n = 2.9 \longrightarrow n = 3$

Use 3-ϕ35 mm bars ($A_s = 2886 \text{ mm}^2$)

— minimum $b_w = 3(35) + 2(35) + 2(10) + 2(40) = 275^{mm} < 300^{mm}$ (ok)

$\uparrow d_b \quad \uparrow s \quad \uparrow d_s \quad \uparrow d_s$

- Actual effective depth, d

$$d = 550 - 40 - 10 - \frac{35}{2} = \underline{482.5^{mm}}$$

Use $d = 482.5^{mm}$

Check the beam capacity with an analysis for M_R:

1. The effective flange width has been established as 685^{mm}.
2. The tensile force (assuming steel yields)

$$N_T = A_s f_y = 2886(420) = 1{,}212{,}120\ N$$

$$= \underline{1{,}212.1\ kN}$$

3. The flange compression (assuming full effective flange area is in compression)

$$N_c = (0.85 f_c')\, b\, h_f$$

$$= 0.85(21)(685)(90) = 1{,}100{,}452.5\ N = \underline{1{,}100.5\ kN}$$

4. Since $\underline{N_T} > N_c$, the compressive stress block must extend below the flange far enough to pick up the remaining compression of

$$N_T - N_c = 1212.1 - 1100.5 = \underline{111.6\ kN}$$

Hence the analysis is for a true T-beam.

5.

$$a = \frac{N_T - N_c}{(0.85 f_c')(b_w)} + h_f$$

$$= \frac{111.6 \times 10^3}{0.85(21)\,300} + 90 = 110.8 \text{ mm}$$

6. Check ρ_{min},

$$\rho_{min} = \frac{1.4}{f_y} = 0.00333$$

$$\rho = \frac{A_s}{b_w d} = \frac{2886}{300(482.5)} = 0.01994 > \rho_{min} \text{ (ok)}$$

7. Locate the centroid of the compressive area from the top of the cross section.

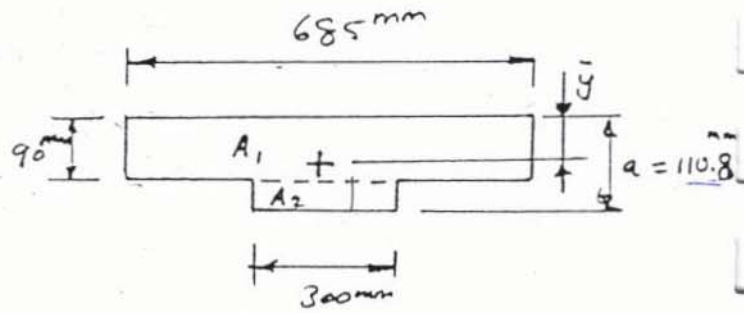

$$\bar{y} = \frac{\Sigma A y}{\Sigma A}$$

$A_1 = 685(90) = 61650 \text{ mm}^2$ $\qquad$ $A_2 = 300(20.8) = 6240 \text{ mm}^2$

$$\bar{y} = \frac{61650(45) + 6240(\text{[illegible]})}{61650 + 6240} = 50.1 \text{ mm}$$

$\rightarrow h_f + \frac{h}{2}$

from which $z = d - \bar{y} = 482.5 - 50.1 = 432.4$ mm

8. Computing the resisting moment M_R.

$$M_R = \phi N_T z = 0.9(1212.1)10^3(432.4)10^{-6} = 471.7 \text{ kN.m}$$

$M_R > M_u$ (460 kN.m) ok

وقاومه المقطع تساوي او اكبر من المعطى

9. Check ductility

$$\varepsilon_t = 0.003\left(\frac{\beta_1 d_t}{a} - 1\right)$$

$$= 0.003\left(\frac{.85(482.5)}{110.8} - 1\right) = 0.008 > 0.005 \text{ (ok)}$$

10. Sketch the design.

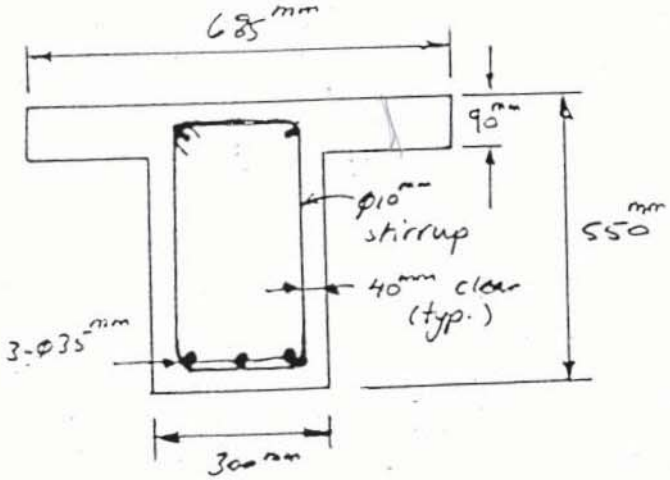

Summary of Procedure for design of T-Beams

1. Compute the design moment M_u.

2. Assume an effective depth d; $d = h - 75^{mm}$.

3. Establish the effective flange width based on ACI criteria.

4. Compute the resisting moment M_R assuming that the total effective flange is in compression.

$$M_{Rf} = \phi (0.85 f'_c) b h_f \left(d - \frac{h_f}{2}\right)$$

5. If $M_R > M_u$, the beam will behave as a rectangular T-beam of width b. If $M_R < M_u$, the beam will behave as a true T-beam.

Rectangular T-beam

6. Design as a rectangular beam with b and d as known values. Compute the required R_n.

$$R_n = \frac{M_u}{\phi b d^2}$$

7. Determine ρ as

$$\rho = \frac{1}{m}\left(1 - \sqrt{1 - \frac{2mR_n}{f_y}}\right)$$

where $m = \dfrac{f_y}{0.85 f'_c}$

8. Compute the required A_s

$$A_s = \rho b d$$

9. Select bars and check the beam width. Check the actual d and compare with the assumed d. If the actual d is slightly in excess of the assumed d, the design will be slightly conservative (on the safe side). If the actual d is less than the assumed d, the design may be on the nonconservative side (depending on steel provided) and should be closely investigated for possible revision.

10. Check ρ_{min} $\quad \rho_{min} = \dfrac{1.4}{f_y}$

and compare it to the actual ρ

$$\text{actual } \rho = \frac{A_s}{b_w d}$$

The actual ρ must be larger than ρ_{min}. If not, the beam is not acceptable

11. Check the ACI ductility requirement.

$$\varepsilon_t = 0.003 \left(\frac{\beta_1 d_t}{a} - 1 \right) > 0.005$$

$$\text{where } a = \frac{A_s f_y}{(0.85 f'_c) b}$$

12. Sketch the design.

True. T-beam

6. Assume that $z = d - \frac{h_f}{2}$

7. Compute the required A_s based on the assumption of step 6.

$$A_s = \frac{Mu}{\phi f_y z} \quad ; \quad \phi = 0.9$$

8. Select bars and check the beam width.

9. Determine the actual effective depth d and analyze the beam. (See the procedure for analysis of T-beam).

10. Sketch the design.

Doubly Reinforced Beams

Reasons for using compression reinforcement ← اسباب استخدام

1- Deflection control → less creep زحف اقل

2- **Strength:** مقاومة adding compression steel moves the neutral axis up, so it increases the strain in the tension steel (that way you can meet ductility requirement if you can't increase the width (b) of beam).

3- Practical consideiations اعتبارات أخرى

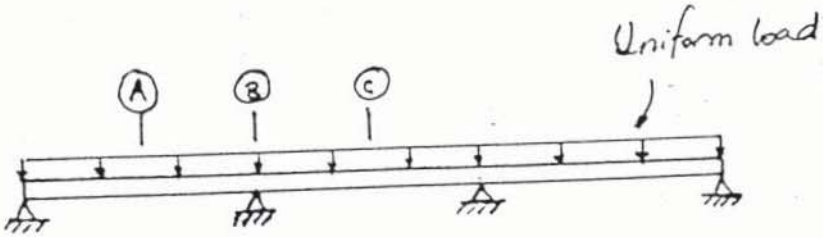

Moment Diagram

Analysis of Double Reinforced Section

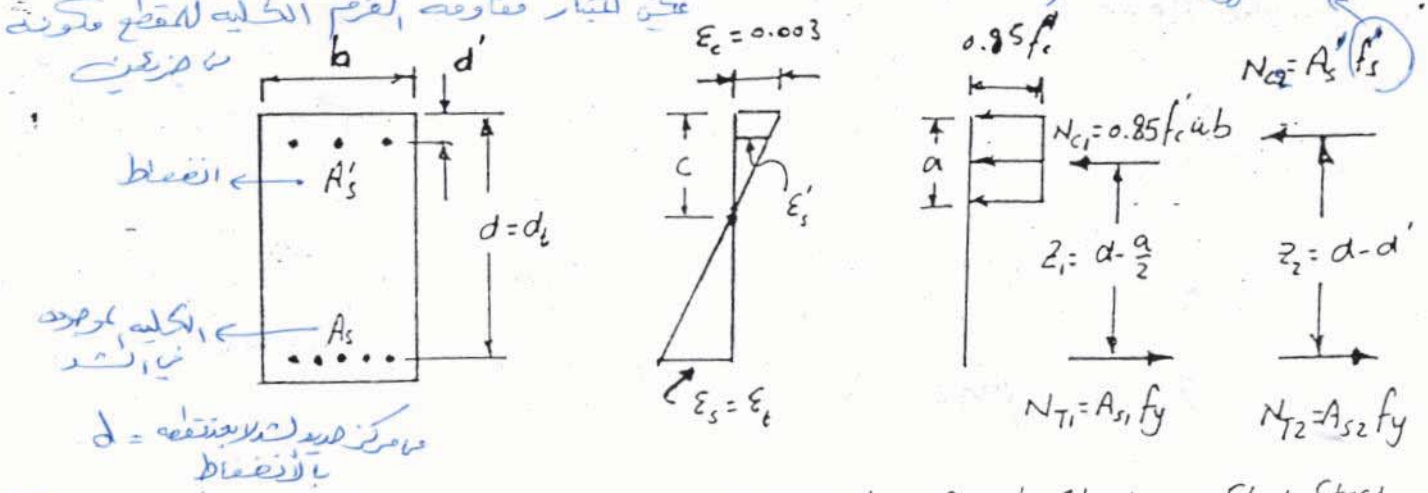

(a) Cross Section — (b) Strain at Ultimate Moment — (c) Concrete-Steel Couple (M_{n1}) — (d) Steel-Steel Couple (M_{n2})

Let $A_s = A_{s1} + A_{s2}$

$M_{n1} = N_{T1} z_1$ = nominal moment strength of the ~~concrete~~ concrete-steel couple.

$M_{n2} = N_{T2} z_2$ = nominal moment strength of the steel-steel couple.

$$M_n = M_{n1} + M_{n2}$$

Steel-Steel Couple: $M_{n2} = N_{T2} z_2 = A_{s2} f_y (d - d')$ —— ①

$$N_{c2} = N_{T2}$$

$$A'_s f'_s = A_{s2} f_y \quad \text{——} ②$$

If $\varepsilon'_s \geq \varepsilon_y \Rightarrow f'_s = f_y$ Condition I

If $\varepsilon'_s < \varepsilon_y \Rightarrow f'_s < f_y$ Condition II

Condition I: $f'_s = f_y$

Eq. ②: $A'_s f_y = A_{s2} f_y$

$$A'_s = A_{s2}$$

Therefore Eq. ①:

$$M_{n2} = A_s' f_y (d - d')$$

مقاومة العزم الثاني

Concrete-steel couple: $M_{n1} = N_{T1} z_1$

$$M_{n1} = A_{s1} f_y \left(d - \frac{a}{2}\right)$$

Since $A_{s1} = A_s - A_{s2}$

and $A_{s1} = A_s - A_s'$

therefore $M_{n1} = (A_s - A_s') f_y \left(d - \frac{a}{2}\right)$

$$M_n = M_{n1} + M_{n2}$$

$$M_n = (A_s - A_s') f_y \left(d - \frac{a}{2}\right) + A_s' f_y (d - d')$$

$$M_R = \phi M_n$$

To determine a ($a = \beta_1 c$)

$$N_T = N_C = N_{C1} + N_{C2}$$

$$A_s f_y = (0.85 f_c') ab + A_s' f_y$$

$$a = \frac{(A_s - A_s') f_y}{(0.85 f_c') b}$$

$$a = \frac{A_{s1} f_y}{(0.85 f_c') b}$$

Example: Compute the dependable resisting moment strength M_R for beam having ~~across~~ section as shown..

Use $f_c' = 20$ MPa and $f_y = 300$ MPa.

لتحليل المقطع الافتراضي مبدئيا بان جميع الحديد قد وصل الخضوع وتعدل الحسابات ان تبين
بعد أن قسم من الحديد لم يصل الى الخضوع عليه :

1. Assume that all the steel yields.

$$f_s' = f_y \quad \text{and} \quad f_s = f_y$$

Therefore $A_{s2} = A_s'$

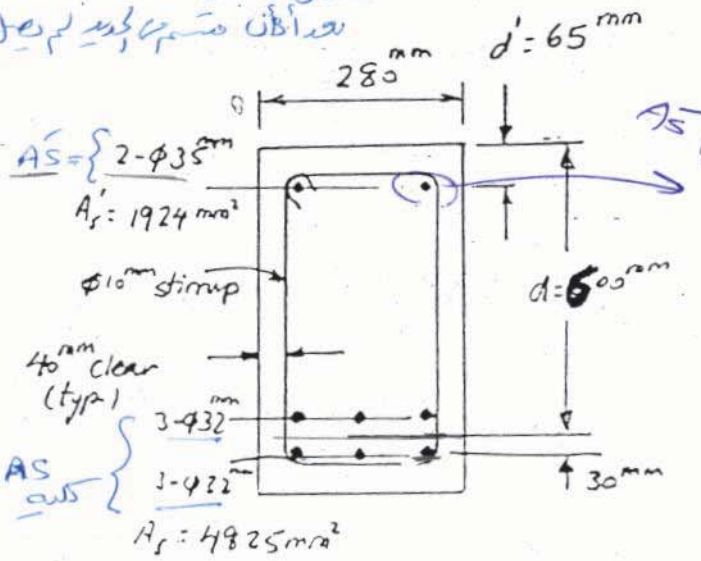

2.

$$A_s = A_{s1} + A_{s2}$$

$$A_{s1} = A_s - A_s'$$

$$= 4825 - 1924 = 2901 \text{ mm}^2$$

$$a = \frac{A_{s1} f_y}{(0.85 f_c')b} = \frac{2901(300)}{0.85(20)280} = 182.8 \text{ mm}$$

3.

$$c = \frac{a}{\beta_1} = \frac{182.8}{0.85} = 215.1 \text{ mm}$$

4. From strain diagram

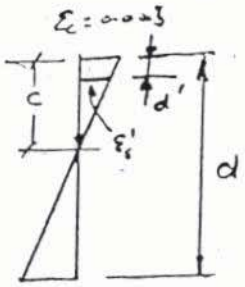

$$\varepsilon_s' = \frac{c - d'}{c}(0.003)$$

$$= \frac{215.1 - 65}{215.1}(0.003) = 0.0021$$

$$\varepsilon_y = \frac{f_y}{E_s} = \frac{300}{200{,}000} = 0.0015$$

$$\varepsilon_s' > \varepsilon_y \Longrightarrow f_s' = f_y \quad \text{ok}$$

$$\varepsilon_s = \frac{d - c}{c}(0.003)$$

$$= \frac{600 - 215.1}{215.1}(0.003) = 0.0054 > \varepsilon_y$$

$$f_s = f_y \quad \text{ok}$$

5.

$$M_{n1} = A_{s1} f_y \left(d - \frac{a}{2}\right)$$

$$= 2901(300)\left(600 - \frac{182.8}{2}\right) \times 10^{-6} = 442.6 \text{ kN·m}$$

$$M_{n2} = A_s' f_y (d - d')$$

$$= 1924(300)(600 - 65) \times 10^{-6} = 308.8 \text{ kN·m}$$

$$M_n = M_{n1} + M_{n2}$$

$$= 442.6 + 308.8 = 751.4 \text{ kN·m}$$

6.

$$M_R = \phi M_n$$

$d_t = 630$ mm

$$\varepsilon_t = 0.003\left(\frac{\beta_1 d_t}{a} - 1\right)$$

$$= 0.003\left(\frac{0.85(630)}{182.8} - 1\right) = 0.0058 > 0.005 \quad (\text{ok})$$

$\therefore \phi = 0.9$

$$M_R = 0.9(751.4) = 676.3 \text{ kN·m}$$

Condition II : $\varepsilon_s' < \varepsilon_y \Rightarrow f_s' < f_y$

Example: Compute the dependable resisting moment strength M_R for a beam having a cross section. Use $f_c' = 35$ MPa and $f_y = 420$ MPa

1. Assume $f_s' = f_y$ & $f_s = f_y$

$\therefore A_{s2} = A_s'$

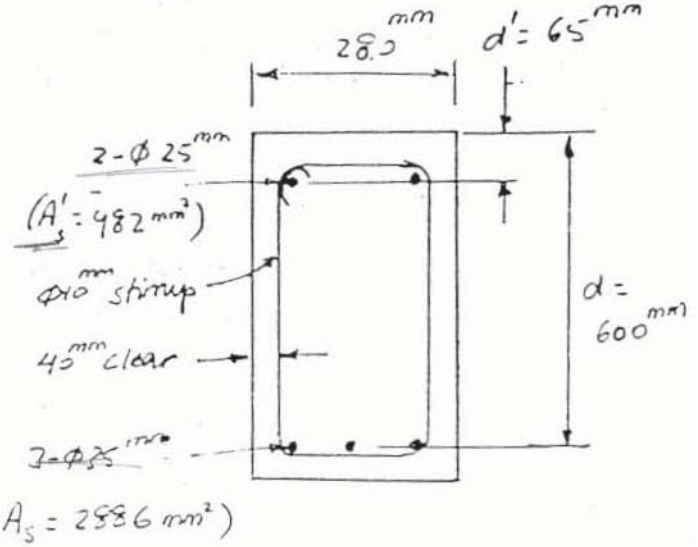

2.

$A_{s1} = A_s - A_s'$

$= 2586 - 982 = 1904\ mm^2$

$$a = \frac{A_{s1} f_y}{(0.85 f_c')b}$$

$$= \frac{1904(420)}{0.85(35)\,280} = 96\ mm$$

3. Locate the neutral axis.

$$a = \beta_1 c \quad ; \quad \beta_1 = 0.85 - \frac{0.05}{7}(f_c' - 30) = 0.81$$

$$c = \frac{a}{\beta_1} = \frac{96}{0.81} = 118.5\ mm$$

4. From strain diagram:

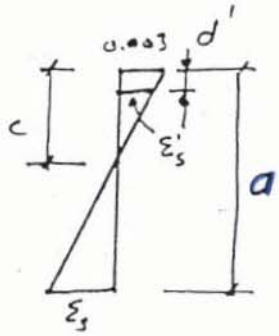

ε_s' $\quad \varepsilon_s' = 0.003\,\frac{c - d'}{c}$

$$\varepsilon_s' = 0.003\left(\frac{118.5 - 65}{118.5}\right) = 0.0014$$

$$\varepsilon_y = \frac{f_y}{E_s} = \frac{420}{200{,}000} = 0.0021$$

$\varepsilon_s' < \varepsilon_y \longrightarrow f_s' < f_y$

ε_s $\quad \varepsilon_s = 0.003\,\frac{d - c}{c} = 0.003\left(\frac{600 - 118.5}{118.5}\right) = 0.012 > \varepsilon_y$

$\therefore f_s = f_y$

5. Assumptions are incorrect.

لتكون اجهاد الانضغاط (F_s')
لا يساوي اجهاد الخضوع (f_y)
لن تكون ضمنية ويجب ان تحسب اجهادات
الحديد وقيمة Mn بموجب شروط التوازن
وشكل الانفعالات من معادلة
(شرط التوازن الافقي) نجد قيمة c

$$N_T = N_c = N_{c1} + N_{c2}$$

$$A_s f_y = (0.85 f_c') b a + f_s' A_s'$$

$$f_s' = \varepsilon_s' E_s$$

$$= 0.003 \left(\frac{c-d'}{c}\right) E_s$$

$$\therefore \quad A_s f_y = (0.85 f_c') b \beta_1 c + 0.003 \left(\frac{c-d'}{c}\right) E_s A_s'$$

$$A_s f_y c = 0.85 f_c' b \beta_1 c^2 + 0.003 c E_s A_s' - 0.003 d' E_s A_s'$$

$$(0.85 f_c' b \beta_1) c^2 + (0.003 E_s A_s' - A_s f_y) c - 0.003 d' E_s A_s' = 0$$

with $E_s = 200{,}000$ MPa :

قيمة لإيجاد قيمة c

$$\boxed{(0.85 f_c' b \beta_1) c^2 + (600 A_s' - A_s f_y) c - 600 d' A_s' = 0}$$

$A_s = 2886\ mm^2$; $f_y = 420$ MPa; $f_c' = 35$ MPa

$b = 280$ mm; $\beta_1 = 0.81$; $A_s' = 982\ mm^2$; $d' = 65$ mm

$$[0.85(35)(280)(0.81)] c^2 + [600(982) - 2886(420)] c$$

$$- 600(65)(982) = 0$$

$$6{,}747.3\, c^2 - 622{,}920\, c - 38{,}298{,}000 = 0$$

$$c = \frac{-B \pm \sqrt{B^2 - 4AC}}{2A}$$

$$c = \frac{622.920 \mp \sqrt{(622420) + 4(6747.3)38,298,000}}{2(6747.3)}$$

$$c = 134.5 \text{ mm}$$

6. $$f_s' = 0.003 \frac{c - d'}{c} E_s$$

$$= 600 \frac{134.5 - 65}{134.5} = 310 \text{ MPa} < 420 \text{ MPa}$$

7. $$a = \beta_1 c = 0.81 (134.5) = 108.9 \text{ mm}$$

8. $$N_c = N_{c1} + N_{c2}$$

$$= 0.85 f_c' ab + A_s' f_s'$$

$$= 0.85(35)(108.9)(280) + 982(310)$$

$$= 907,137 + 304,420 = 1,211,557 \text{ N} = 1211.6 \text{ kN}$$

(Check) $N_T = A_s f_y = 2886(420)10^{-3} = 1212.1 \text{ kN}$

$\therefore N_T \simeq N_c$ OK

9. $$M_{n_1} = N_{c1} z_1 = N_{c1}\left(d - \frac{a}{2}\right) = 907,137\left(500 - \frac{108.9}{2}\right)10^{-6} = 404.2 \text{ kN.m}$$

$$M_{n_2} = N_{c2} z_2 = N_{c2}(d - d') = 304,420(500 - 65)10^{-6} = 132.4 \text{ kN.m}$$

$$M_n = M_{n_1} + M_{n_2} = 536.6 \text{ kN.m}$$

10. $\varepsilon_t = 0.003\left(\frac{\beta_1 d_t}{a} - 1\right)$

$= 0.003\left(\frac{0.81(600)}{108.9} - 1\right) = 0.01 > 0.005$ ∴ Ductile section

$\phi = 0.9$

$M_R = \phi M_n = 0.9(536.6) = 482.9\ kN.m$

Summary of Procedure for Analysis of Doubly Reinforced Beams:

1. Assume that all the steel yields, $f_s = f_s' = f_y$. Therefore,

$$A_{s2} = A_s'$$

2. Using the concrete-steel couple and $A_{s1} = A_s - A_s'$, compute the depth of the compression stress block.

$$a = \frac{A_{s1} f_y}{(0.85 f_c')b} = \frac{(A_s - A_s')f_y}{(0.85 f_c')b}$$

3. Compute the location of the neutral axis.

$$c = \frac{a}{\beta_1}$$

4. Using the strain diagram, check the strains in both the compressive and tensile steels to determine whether the assumption in step 1 is valid.

$$\varepsilon_s' = 0.003\left(\frac{c - d'}{c}\right)$$

$$\varepsilon_s = 0.003\left(\frac{d - c}{c}\right)$$

Assuming that $\varepsilon_s \geq \varepsilon_y$, that is, that the tensile steel has yielded, the two following conditions may exist:

a. Condition I: $\varepsilon_s' \geq \varepsilon_y$.

This indicates that the assumption of step 1 is correct and the compression steel has yielded.

b. Condition II: $\varepsilon_s' < \varepsilon_y$.

This indicates that the assumption of step 1 is incorrect and the compression steel has not yielded.

<u>Condition I</u> ($\varepsilon_s' \geq \varepsilon_y$ & $\varepsilon_s \geq \varepsilon_y$)

5.

Concrete-steel couple:

$$M_{n1} = A_{s1} f_y (d - \frac{a}{2})$$

Steel-steel couple:

$$M_{n2} = A_s' f_y (d - d')$$

and

$$M_n = M_{n1} + M_{n2}$$

6. $M_R = \Phi M_n$; $\Phi = 0.9$

7. Check that $\varepsilon_t \geq 0.005$ (tension-controlled section).

$$\varepsilon_t = 0.003 \left(\frac{\beta_1 d_t}{a} - 1 \right)$$