5-Undercarriage (Landing Gear) Layout Design

5.1. General requirements:

1. During takeoff and landing, only the wheels tires should be in contact with the ground.
2. Inflation pressure of the tire and the configuration of u.c. should be chosen in accordance with
3. earing capacity of the airfields, which a/c is designed to operate on.
4. It should be able to absorb the normal landing impact loads with good damping characteristics.
5. Braking should be efficient.
6. During cross wind landings and high speed taxing there should be no tendency to instabilities such as canting of the a/c.
7. Sufficient internal space with structural elements serves as attachment points, should be provide.


Wing and fuselage undercarriages on a Boeing 747-400, shortly before landing

5.2. Functions of Undercarriage :

1. To absorb landing shocks and taxiing shocks.
2. To provide ability for ground maneuvering: taxi, take-off roll, landing roll and steering.
3. To provide for braking capability.
4. To allow for airplane towing.
5. To protect the ground surface.

5.3. Runways Classifications:

1. Runways with rigid pavement, consisting of discrete slabs of concrete, laid on a relatively soft subsoil.
2. Runways with flexible pavement, thick layer of asphalt or tarmacadam on base of gravel or sand.
3. Others, (sand, grass, water, snow…etc.).

5.3. Type of u.c.

5.3.1. Tail Wheel U.C.

Tail wheel undercarriages have two main units forward of the center of gravity and one behind which, in the simplest case, may be only a skid. At rest the aircraft sits tail-down at an angle of attack slightly less than the stalling angle of the

Douglas DC-3 with tail wheel landing gear

wings with high-lift devices extended. Large the angle *, the easer it will be to ground loop. If the angle is too small, it will be easy to nose over.

$$K = \frac{R \times h}{p_m \times a}$$

$$\tan\theta = \frac{a}{h} = \frac{R}{p_m . K} = \frac{\mu}{K} \approx \frac{0.25}{0.8}$$

θ : overturnning angle, $\approx 17° \; to \; 19°$

K : Overturning coefficient ($\approx 0.7 \; to \; 0.8$).

R : Friction force, $= \mu p_m$.

p_m : Load force on nose main wheels ($\approx 45\%$ a/c weight).

μ : Braking coefficient of friction (≈ 0.25).

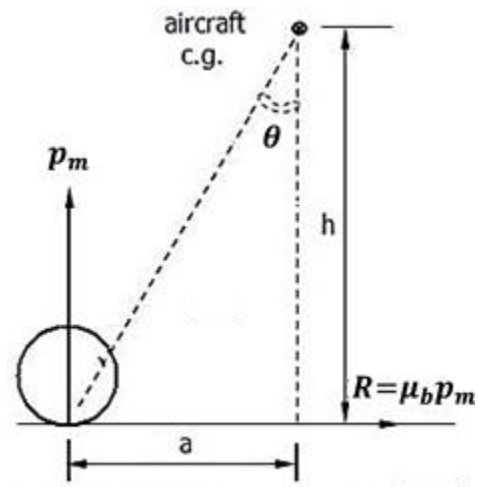

Figure 5a: Tail wheel overturnning angle

Advantages:

Aerodynamic cleanliness, relative lightness, simplicity and cheapness.

a) On ground the a/c can be pushed around on manhandle easily.
b) Aircraft will be three pointed onto the ground with power-off, because a/c set were laid down at an angle slightly less than (α_{stall}), with flaps down.
c) When brakes are applied the vertical load on the main gear will increase, thereby reducing the risk of skidding.

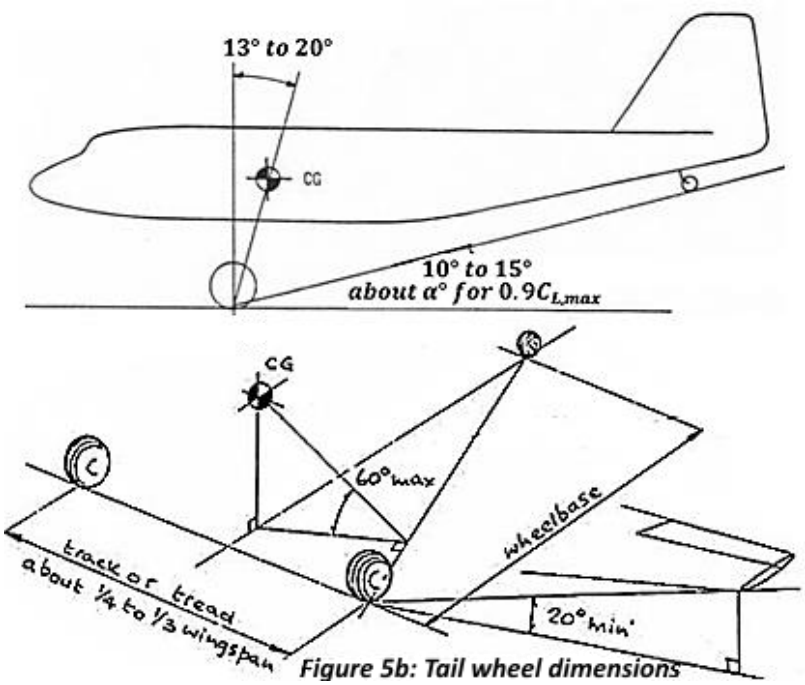

Figure 5b: Tail wheel dimensions

Disadvantage:

a) Tendency to swing out wards in a turn, because c.g. lies behind the main wheels.
b) Tail wheel in large a/c must be fitted with a lock so as not to swivel.
c) Passengers and crew have to walk uphill when boarding.
d) If the track is too narrow, wing tips will be damaged by the a/c tipping sideways when ground looping or in strong crosswind.

Undercarriage of Airbus A380

5.3.2. Nose wheel u.c.

Most commercial and training airplanes have nose u.c. (gear). The angle, *, should not be to large, otherwise the nose wheel will touch first in a tail up landing causing wheel barrowing and loss of directional stability.

If the track is too narrow wig tips may be damaged.

Ψ : Overturning angle, the tendency to overturn sideways, ($\approx 25° \; to \; 60°$).

Φ : Angle of roll on ground.

∗ : An angle between aircraft datum and horizontal level.

θ : Overturning angle, the tendency to set on its tail. $\approx \alpha_{0.9} + 3°$

$\alpha_{0.9}$: is angle of attack for $0.9C_{L,max}$

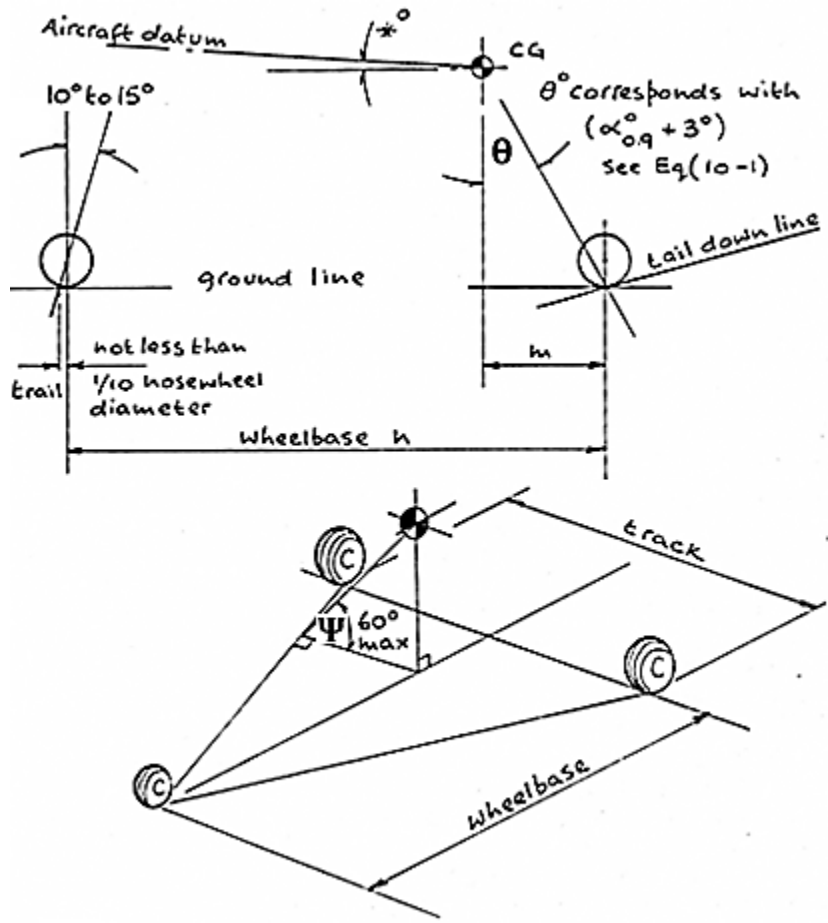

Figure 5.3a.: Nose wheel definitions

Advantage:

1. Easy to load and unload.
2. View over the nose is excellent.
3. Faster and straighter at taxing.
4. Move comfortable when boarding.
5. Better ground stability, less ground loop and permits full.
6. Small wing incidence, i, permits a faster acceleration, thus a reduction in take-off distance.

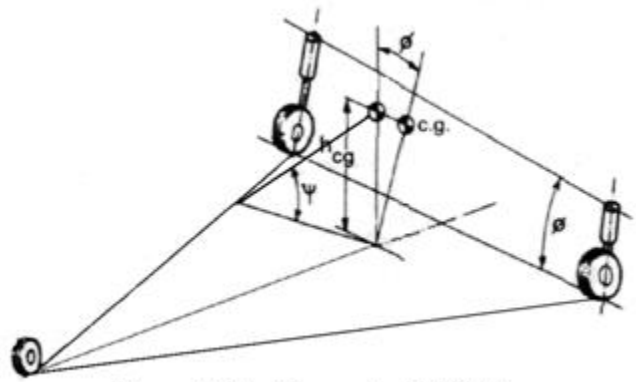

Figure 5.3b.: Nose wheel definitions

Disadvantage:

1. Heavier, because it takes greater load than tail wheel type.
2. Higher drag so must be retractable.
3. Static nose wheel reaction is about 6-16% MTOW due to c.g. position and the nose unit must take 20 to 30% of the aircraft's weight in a steady braked condition and it is therefore relatively heavy.
4. High load on nose wheel makes it hard to rotate nose up on takeoff through an insufficient elevator power.
5. There is a tendency for the aircraft to sit on its tail

5.3.3. Bicycle (tandem) u.c.


Boeing B-47B "Stratojet" rocket-assisted take off on April 15, 1954

Type (a) has been used on large jet bombers (e.g. *Boeing B-47)* designed to operate from well prepared airfields.

Type (b) has found a number of military applications, especially with VTOL machines in recent years.

Type (c) is commonly used for motor gliders.


Hawker Siddeley Harrier GR7, with a a Bicycle or tandem layout
The two mainwheels are in line astern under the fuselage,
with a smaller outrigger wheels on each wing

Advantage

a. Both main legs are placed at nearly equal distances ahead of and behind the center of gravity, thus locally creating space for payload close to it.
b. The wheels may be retracted inside the fuselage without interrupting the win structure. The increase if any in fuselage weight will depend on other factors.

Disadvantages:

a. Outrigger wheels will be required to stabilize the aircraft on the ground and to prevent tips from touching ground. These may increase the all-up weight by-approximately 1%.
b. The pilot must carefully maintain the proper touchdown attitude in order to avoid overstraining the gear.
c. A large tail download is required to rotate the aircraft. It will therefore be desirable to choose the attitude of the aircraft at rest so that it will fly itself off.

Generally speaking, the arguments against the tandem gear are of such a nature that its adoption should only be considered when no other solution meets the case

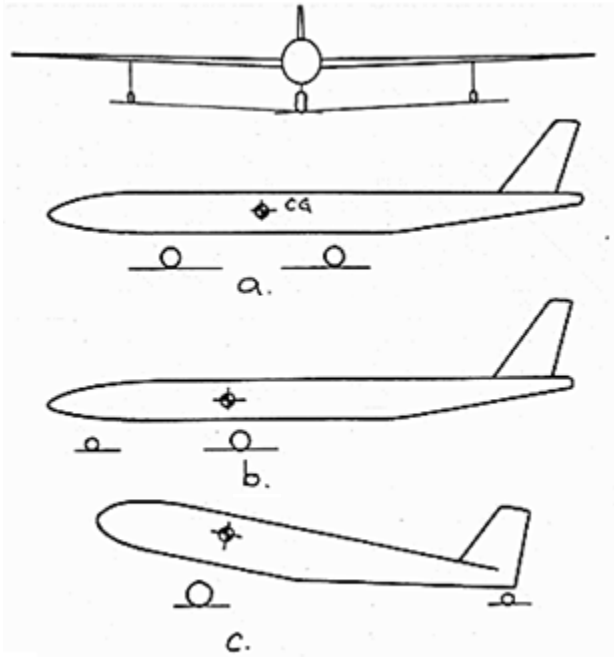

Figure 5.4.: Bicycle arrangements with outriggers

5.3.4. Other types of u.c.:

Skids for icy land, floats for seaplane.

5.4. Landing gear (Undercarriage):

The landing gear is an assembly that supports the aircraft during landing, or whiles it is resting or moving about on the ground. The landing gear has shock struts to absorb the shock of landing and taxiing. By means of a gear-retraction mechanism, the landing gear attached to the aircraft structure and enables the gear to extend and retract. The landing gear arrangement, in common, has either a tail-wheel or a nose-wheel.

Landing gear arrangements having a nose-wheel are usually equipped for nose-wheel steering. Nose-wheel aircraft are protected at the fuselage tail section with a tailskid or bumper. By means of wheels and tires (or skids), the landing gear forms a stabilizing contact with the ground during landing and taxiing. Brakes installed in the wheels enable the aircraft to be slowed or stopped during movement on the ground.

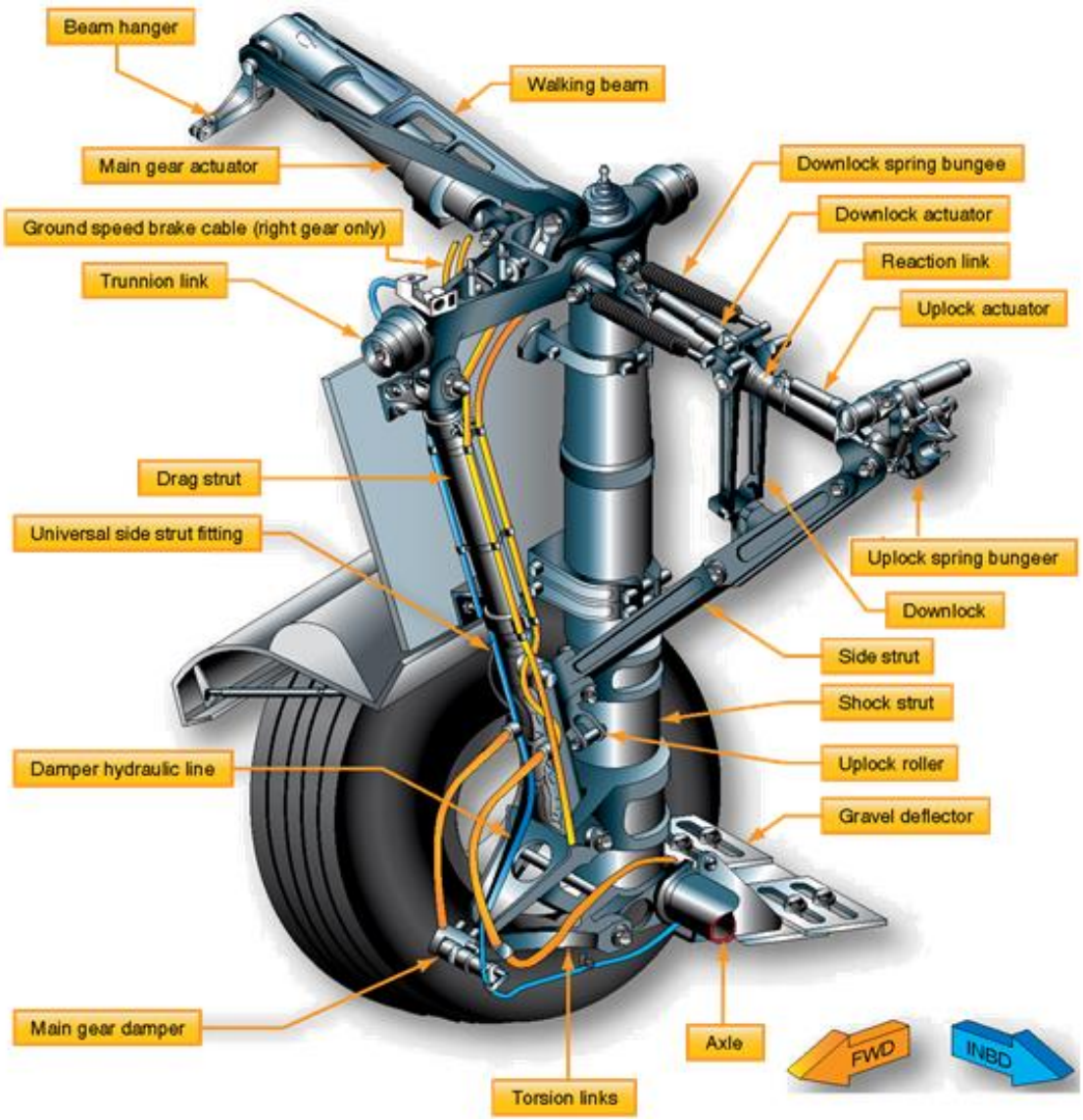

5.5. Tailoring U.C. to bearing capacity of airfield:-

Runways airfield bearing capacity have been classified a according to various bearing classification parameters. The strength of the runway pavement soil strength should be evaluated first.

(CBR), California Bearing Ratio, a measure of the pavement soil strength expressed as the ratio in percent of the force required to produce a given penetration of a standard flat-faced, cylindrical piston into the soil compared to the force required to produce the same penetration in a standard crushed limestone material. This method of design was developed by the California Division of Highways in 1928. The method was subsequently adopted for military airport use by the U.S. Army Corps of Engineers, shortly after the outbreak of World War II. The CBR method still remains in wide spread use today.

The CBR rating was developed for measuring the load-bearing capacity of soils used for building roads. It can also be used for measuring the load-bearing capacity of unpaved airstrips or for soils under paved airstrips. The harder the surface, the higher the CBR rating is. The standard material for this test is crushed California limestone which has a value of 100.

- LCN Load Classification Number.
- LCG/LCN rating system : Load Classification Group / Load Classification Number.
- ACN/PCN rating system : Aircraft Classification Number / Pavement Classification Number.
- ALR/PLR rating system : Aircraft Load Rating / Pavement Load Rating.

The bearing capacity of a runway is depended upon the wheel load and the inflation pressure of the tire. The LCN system which was developed by $ICAO$, international Civil Aviation Organization, in 1965. The LCN represents the severity of stresses produced by a given a/c. A similar LCN used to represent the strength of the supporting pavement. The criteria have been developed to indicate the suitability of the pavement to accommodate stated level of a/c movement. Recently $ICAO$ adoptes the ACN/PCN rating system.

Aircraft type	MTOW, kg	Tire pressure, bar	LCN
Fokker F-27 MK 500	20412	5.5	19
Fokker F-28 MK 2000	29485	7.0	27
McDonnell D Dc. 9/10	40824	9.0	39
Boeing 707/320	136078	9.6	58
McDonnell D Dc. 9/10	185973	12.0	88

Table (5-1): Typical values for LCN, for main u.c.

The British LCG/LCN rating system is based on the original LCN system which was developed by $ICAO$ in 1965, but makes no distinction between asphalt (flexible) and concrete (rigid) pavement. Since these two surfaces react to loads differently, LCG type $LCNs$ are not considered to be a highly precise measure of pavement strength particularly for flexible pavements. The LCG system gives an LCN range that was developed by the UK Ministry of Defence for their military flight

LCG	LCN Range (Range based on the 1971 British LCG System)
I	101 - 120
II	76 - 100
III	51 – 75
IV	31 – 50
V	16 – 30
VI	11 – 15
VII	10 and under

Table 5.2: LCG/LCN rating system

crews. The lower the LCG value, the higher the LCN range as shown in the following table.

In 1977, $ICAO$ established a Study Group to develop a single international method of reporting pavement strengths. The study group developed, and $ICAO$ adopted, the Aircraft Classification Number - Pavement Classification Number ($ACN - PCN$) method. Using this method, it is possible to express the effect of an individual aircraft on different pavements with a single unique number that varies according to aircraft weight and configuration (e.g. tire pressure, gear geometry, etc.), pavement type, and subgrade strength. This number is the Aircraft Classification Number (ACN). Conversely, the load-carrying capacity of a pavement can be expressed by a single unique number, without specifying a particular aircraft or detailed information about the pavement structure. This number is the Pavement Classification Number (PCN).

ACN is a number that expresses the relative effect of an aircraft at a given configuration on a pavement structure for a specified standard subgrade strength.

PCN is a number that expresses the load-carrying capacity of a pavement for unrestricted operations.

The CAN/PCN system is structured so a pavement with a particular PCN value can support an aircraft that has an ACN value equal to or less than the pavement's PCN value. This is possible because ACN and PCN values are computed using the same technical basis. The ACN/PCN system is only intended as a method that airport operators can use to evaluate acceptable operations of aircraft. It is not intended as a pavement design or pavement evaluation procedure, nor does it restrict the methodology used to design or evaluate a pavement structure.

Federal Aviation Administration, FAA, adoptes the ACN/PCN rating system and recommends for all paved runways, taxiways, and aprons at all airports. FAA developed a software application called $COMFAA$ that calculates ACN and PCN values to facilitate the use of the ACN/PCN system.

The CAN/PCN method for reporting the aerodrome pavement bearing strength is the job of constructer engineer and it is explained in details in ($ICAO$, Aerodrome Design Manual, DOC 9157 part 3, Pavements).

5.5.2. calculation of LCN:


Main landing gear leg and six-wheel bogie of a Boeing-777-300


Antonov An-225 Mriya
32-wheel landing gear of the
world's largest aircraft

The LCN rating method had been introduced by the ICAO on the basis of much theoretical and experimental work, and it was widely accepted in many countries. Permissible values of the LCN had been assigned to all major runways, and aircraft had to be designed in such a way that the undercarriage will not exceed the lowest LCN value of the airfields from which the aircraft is likely to operate. The method is described by Torenbeek.

for single wheel:-

LCN can be found directly from figure (5-5) from the relationship between wheel load and inflation pressure.

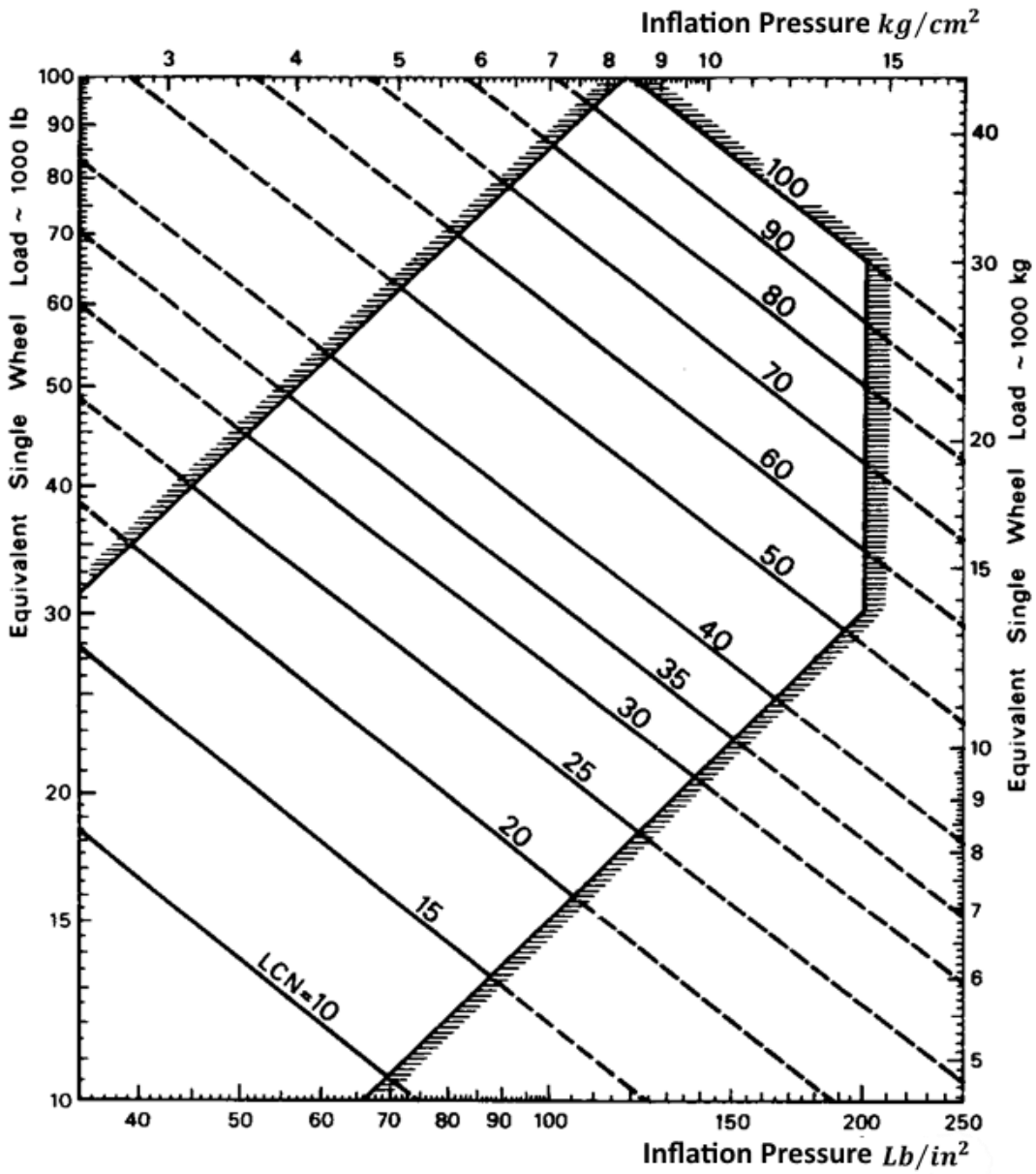

Figure 5.5: Load Classification Number for various combinations of tire pressure and wheel load

For two

or more wheels:-

Equivalent single wheel load, ESWL, is used which is equal to the load on a single isolated wheel, in condition that;

- Having the same inflation pressure.
- Causing the same stresses in the runway as those due to the group of wheels.

5.5.2.1. Calculation for rigid pavement.

1. Calculate the radius of relative stiffness of concrete, $L\ in\ cm$.

   For bad pavement substructure

   $L = 8.0 \times \delta^{3/4} \quad L\ \&\ \delta\ \ are\ in\ inch$

   $L = 10.1 \times \delta^{3/4} \quad L\ \&\ \delta\ \ are\ in\ cm$

For good pavement substructure

   $L = 6.1 \times \delta^{3/4} \quad L\ \&\ \delta\ \ are\ in\ inch$

   $L = 7.7 \times \delta^{3/4} \quad L\ \&\ \delta\ \ are\ in\ cm$

   δ : Thickness of the runway pavement construction in cm. typical value is , $\delta = 30\ cm.$

2. for dual wheel u.c:-

   a. Calculate contact area, it is the total contact area of all wheels of one u.c. assembly.

   $$contact\ area = \frac{total\ load\ of\ one\ u.c.assembly}{inflation\ pressure}$$

   b. Calculate the values:

   $$\frac{contact\ area}{L^2}$$

   $$\frac{S_T}{L} = \frac{wheel\ space}{L}\ or\ \frac{wheel\ track}{L}$$

   c. From figure (5-6) find reduction factor.

   d. Evaluate equivalent single load, $ESWL$.

   $$ESWL = \frac{total\ load\ from\ one\ u.c.}{reduction\ factor}$$

   e. Then find LCN from figure (5-5).

3. for dual-tandem wheel u.c:-

   a) Evaluates

   $$\frac{S_B}{L} = \frac{wheel\ base\ for\ dual\ tandem\ u.c.}{L}$$

   $$\frac{S_T}{L} = \frac{wheel\ track\ for\ dual\ tandem\ u.c.}{L}$$

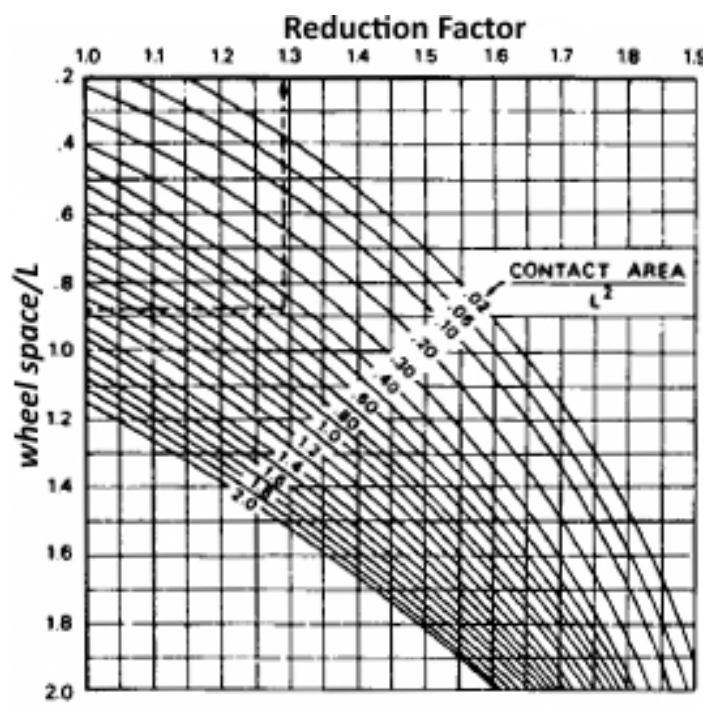

Figure 5.6: ESWL for rigid pavement, dual u.c.

$$\frac{contact\ area}{L^2}$$

b) Find reduction factor From figure (5-7),

c) Evaluate:

$$ESWL = \frac{total\ load\ from\ one\ u.c.}{reduction\ factor}$$

d) Then find LCN from figure (5-5).

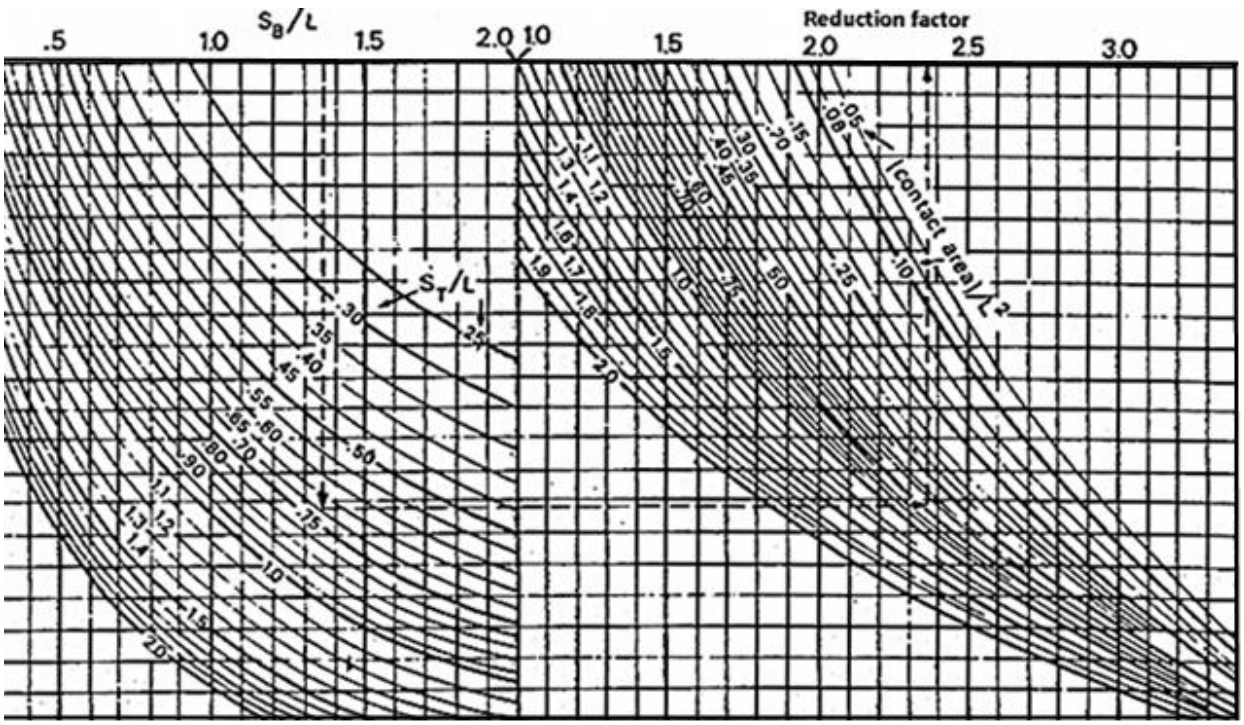

Figure 5.7: ESWL for rigid pavement, dual-tandem u.c.

5.5.2.2.Calculation For flexible pavement.

To calculate LCN for flexible runway pavement, there are two method to compute $ESWL$. Both methods depend on the relation between pavement thickness and dimensions of u.c. imprint.

- Graphical method, see figure (5.8).
- Mathematical method.

a) Assume a value for flexible pavement thickness, δ.

b) Choice u.c. arrangement, single, dual and dual-tandem

c) Calculate distance between tire imprints, D. Assume tire imprint to be an ellipse with the major axis equal to (1.4) time the minor axis. The $(D/2)$ is in cm, see (5.8), where;

$$\frac{D}{2} = \frac{S_T}{2} - \sqrt{\frac{L_w}{1.4\pi(I.P)}}$$

D: Distance between tire imprints.

S_T: Spacing (track) of two dual wheels in cm.

L_w: Static load on one wheel in kg.

$I.P$: Inflation pressure.

i. If the pavement thickness ($\delta \leq D/2$),

$ESWL = wheel\ load\ from\ one\ tire$

ii. If the pavement thickness ($D/2 \leq \delta \leq S_T\ or\ S_D$). The following expressions may be used:-

For dual assemblies,

$$\log(ESWL) = \left(\log L_w + 0.3\frac{\log\delta - \log(D/2)}{\log 2S_T - \log(D/2)}\right)$$

For dual − tandem assemblies,

$$\log(ESWL) = \left(\log L_w + 0.6\frac{\log\delta - \log(D/2)}{\log 2S_D - \log(D/2)}\right)$$

ii. if ($\delta \geq S_T$) or ($\delta \geq S_D$), then:

$ESWL =$ load from one u.c. assemblies.

d) Then find LCN from figure (5-5).

Example:-

A MD-10/10 with dual-tandem u.c. has the following data;(MTOW) $= 388{,}000\ lb$ $(176{,}000\ kg)$; $I.p. = 170\ lb/sq.in.(12\ kg/cm^2)$. For a rigid pavement, $\delta = 12\ in.(30.4\ cm)$ and for flexible pavement, $\delta = 43.3\ in.(110\ cm)$. Assuming that the load on one main gear is equal to 46% of the weight, find (LCN).

Sol.

Load on one undercarriage assembly is:

$\approx 46\%\ MTOW = 0.46 * 388{,}000$

$= 178{,}500\ (81{,}000) kg$

For rigid pavement where $\delta = 12\ in.$The radius of relative stiffness for good subsoil is:

$L = 6.1\ (12)^{3/4} = 39.6\ in.(100\ cm)$.

For $S_B = 64\ in.(163\ cm)$

and $S_T = 54\ in.(137\ cm)$, we find;

$S_B / L = 1.63$

$S_T / L = 1.37$.

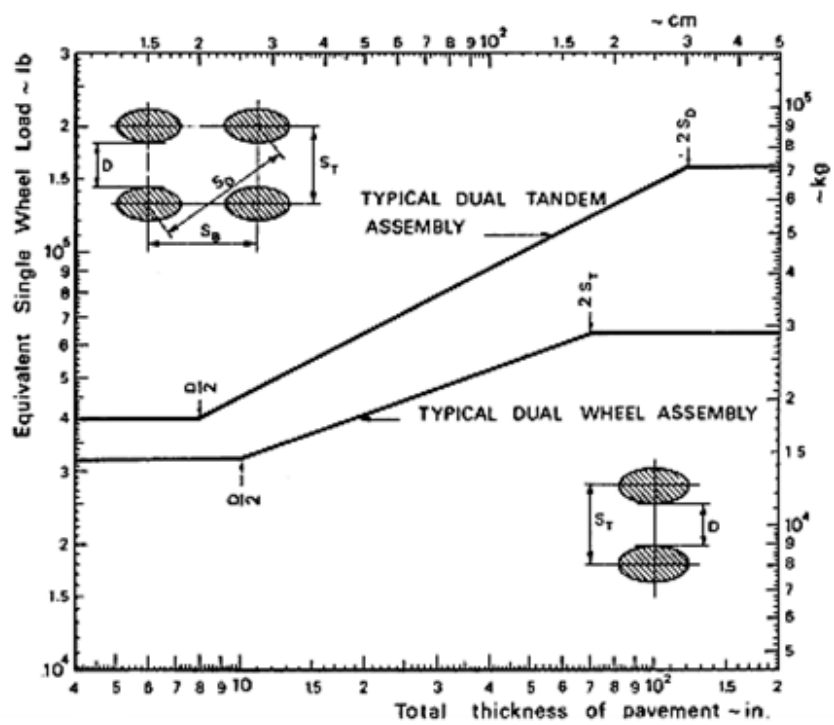

Figure 5.8: ESWL for multi-wheel undercarriage on flexible pavement

The total contact area per undercarriage assembly is

$178{,}500/170 \;=\; 1050\ sq.in.\,(6774\ cm^2)$

$\therefore\ (\text{contact area})/\,L^2 \;=\; .677$

From Fig. 5.8, we obtain a reduction factor of 3.40.

$ESWL = 178{,}500/\,3.4$

$\qquad\qquad = \;52{,}500\ lb\ (23{,}800\ kg).$

From Fig. 5.6, is then used to read LCN = 76.

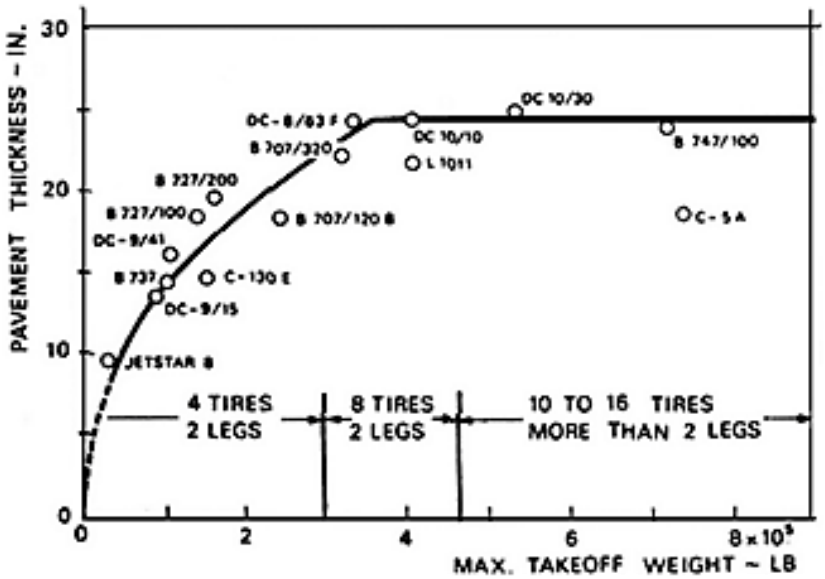

Figure 5.9: Flexible pavement thickness vs MTOW for subgrade CBR=15

For a flexible pavement where

$\delta = 43.3\ in, (110\ cm).$

$S_D \;=\; \sqrt{(64^2 +\ 54^2)} \;=\; 83.74\ in.\,(213\ cm)$

$D/2 \;= 54/2 \;- \sqrt{78{,}500\ /\ (4 * 1.4\pi * 170}$

$\qquad\qquad = \;19.3\ in.\,(49\ cm)$

$\therefore D/2 < \delta < S_D$

For a load per tire of, $L_W = (8100 \div 4) = 44{,}625$ lb (20,150 kg).

$$\log(ESWL) = \left(\log L_w + 0.6\frac{\log\delta - \log(D/2)}{\log 2S_D - \log(D/2)}\right) = \left(\log 44625 + 0.6\frac{\log 43.3 - \log 19.3}{\log 167.48 - \log 19.3}\right)$$

$$= 4.874$$

$\therefore ESWL = 74817\ lb\ (33936\ kg)$

And using Fig. 5.5, we find:

$LCN \;=\; 100$. These results are in fair agreement with the airplane manufacturer data.

5.6. Type, size and inflation pressure of the tires:-

5.6.1. Aircraft Tire Functions

Aircraft tires, tubeless or tube type, job is;

i. Provide a cushion of air that helps absorb the shocks and roughness of landings and takeoffs.
ii. They support the weight of the aircraft while on the ground.
iii. Provide the necessary traction for braking and stopping aircraft on landing.

Aircraft tires must be carefully maintained to meet the rigorous demands of their basic job ... to accept a variety of static and dynamic stresses dependably in a wide range of operating conditions.

5.6.2. Aircraft Tire Construction

Dissect an aircraft tire and you will find that it's one of the strongest and toughest pneumatic tires made. It must withstand high speeds and very heavy static and dynamic loads. For example, the main gear tires of a four-engine jet transport are required to withstand landing speeds up to 250 mph, as well as static and dynamic loads as high as 22 and 33 tons respectively. Typical construction is shown in figure 5.11.

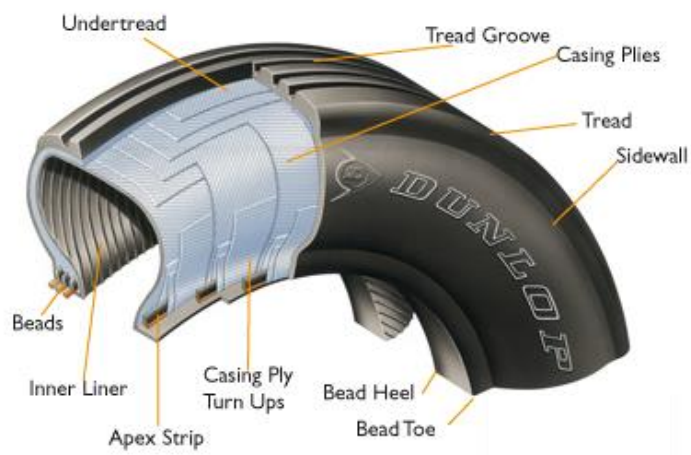

Figure 5.11: Typical aircraft tyre construction

5.6.3. Aircraft Tire Care

Tires are as vital to the operation of aircraft as they are to the operation of an automobile. During ground, operation tires can be considered as ground control surfaces. The same rules of safe driving and careful inspection apply on the runway as on the highway.

They include control of speed, braking, and cornering, and inspection for proper inflation, cuts, bruises, and signs of tread wear. Contrary to what most people think-including many beginning pilots-the toughest demand on aircraft tires is rapid heat buildup during lengthy ground operations, not the impact of hard landings.

Aircraft tires are designed to flex more than automotive tires-over twice as much. This flexing causes internal stress and friction as tires roll on the runway. High temperatures are generated, damaging the body of the tire. The best safeguards against heat buildup in aircraft tires are short ground rolls, slow taxi speeds, minimum braking, and proper tire inflation.

Excessive braking increases tread abrasion. Likewise, fast cornering accelerates tread wear. Proper inflation assures the correct amount of flexing and keeps heat buildup to a minimum, increasing tire life and preventing excessive tread wear.

Inflation pressure should always be maintained as specified in the aircraft maintenance manual or according to information available from a tire dealer.

Even though using a tire gage is the only accurate way to spot-check inflation, a quick visual inspection of the tread can reveal if air pressure has been consistently high or low. Excessive wear in the shoulder area of the tire is an indication of under inflation. Excessive wear in the center of the tire suggests over inflation.

Tires should also be carefully inspected for cuts or bruises. The best way to avoid aircraft tire cuts and bruises is to slow down when unsure of runway or taxiing surface conditions.

Since airplane tires have to grip the runway in the same way car tires grip the road, tread depth is also important. Tread grooves must be deep enough to permit water to pass under the tires, minimizing the danger of skidding or hydroplaning on wet runways. Tire treads should be inspected visually or with an approved depth gage according to manufacturers' specifications.

Another inspection goal is detection and removal of any traces of gasoline or oil on the tires. Such mineral fluids damage rubber, reducing tire life. Likewise, tires should be inspected for ozone or weather checking. Electricity changes oxygen in the air to ozone, which also prematurely ages rubber.


Radial type


Bias type


Chine tire


Anti-shimmy tire

Fig 5.11: Tire TYpes

5.6.4. Type of tires:

There are, generally, two types of tires:

a) Radial tires. ; b) Bias tires.

And also there are:

a) Normal grooved tires.
b) Chine tires; the “chine” tire is a nose wheel tire designed to deflect water and slush to the side and away from engine intakes. It was primarily developed for aircraft with rear-mounted jet engines.
c) Anti-shimmy tires; shimmy is an unstable lateral / yaw vibration with typical frequency in range of $10\ to\ 30\ Hz$.

The choice of wheel tire is based on the maximum static load (L_W) on single wheel. For main u.c. (L_W) is calculated when c.g. location is nearest to main u.c. for nose wheel tires (L_W) is calculated during braking at maximum effort, where c.g. is farthest to the main u.c.

As the exerted load is evaluated, the type of tire is chosen from figure (5.12).

5.6.5. Tire definitions and abbreviations:

1. Three Part Type; All new sizes being developed are in this classification. NOTE: Some sizes have a letter such as "H" in front of the diameter. This is to identify a tire that is designed for a higher percent deflection.
2. Radial; Radial size nomenclature is the same as Three Part Type except an "R" replaces the "-" (dash) before the wheel/rim diameter.
3. Metric Type; This size designation is the same as Three Part except the diameter and section width. Dimensions are in millimeters, and the wheel/rim diameter is in inches.
4. Type I; Oldest type/description giving outside diameter only.
5. Type III; This type was one of the earliest size designations used for piston-propeller aircraft. Its characteristic is low pressure for cushioning and flotation.
6. Type VII; This type covers most of the older sizes and was designed for today's jet aircraft with higher load capacity.

Tire Name Type	Tire Size Example	Nominal Diameter (In)	Nominal Section Width (In)	Nominal Wheel/Rim Diamter (In)
Three Part	49x19.0-20	49	19.0	20
Metric	670x210-12	670 mm	210 mm	12 inches
Type I	27	27	--	–
Type III	8.50-10	–	8.50	10
Type VII	49x17	49	17	–
Radial	32x8.8R16	32	8.8	16

Table 5.3: Tire definitions and abbreviation

5.6.6. Inflation pressure:

There is a limit when the size of the tire is chosen, regarding the inflation pressure. The weight and volume of the tires will decrease with an increase in inflation pressure, assuming that the load and configuration of (u.c.). are constant. Besides that the type of runway has severe influence on inflation pressure. Typical values are represented in table (5-4).

Type of landing surface	Maximum tire pressure	
	kg/sq.cm	Lb/sq.in
Large, properly maintained airport (concrete runway)	8.5 - 14	120 - 200
Small tarmac runway, good foundation	5.0 – 6.3	70 - 90
Small tarmac runway, poor foundation	3.5 – 5.0	50 - 70
Hard grass, depending on soil	3.2 – 4.2	45 - 60
Wet, boggy grass	2.1 – 3.2	30 - 45
Hard desert sand	2.8 – 4.2	40 - 60
Soft, loose desert sand	1.8 – 2.5	25 - 35

Table 5.4: Tire pressure recommendation

The designer must consider many factors when choosing inflation pressure:

1. Increasing $(I.P)$ will decreasing contact area and runway bearing capacity will impose a limit on $(I.P)$.
2. The choice of a lower inflation pressure will result in a larger tire size and hence more space will be available for the brakes and other mechanism.
3. Braking will be less effective with high $(I.P)$. For example on dry concrete, at zero rolling velocity, the braking coefficient of friction, μ_{static}, obeys the following; $\mu_{static} = 0.93 - 0.115 * I.P$ which equal $(0.65 - 0.85)$, where $(I.P)$ is the pressure in $\mathrm{kg/m^2}$.
4. For wet runway aquaplaning velocity depend on $(I.P)$, $V_{aquaplane} \approx 17.5\sqrt{I.P} \;\; in \;\; m/s$.

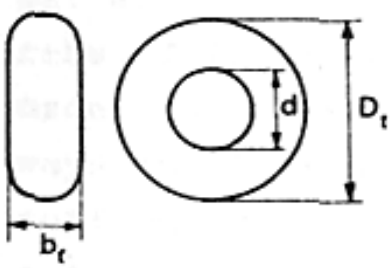

	D_t ×	b_t	– d	
British sizes	36 ×	10.00	– 18	
		6.00	– 4	
American sizes	27			type I
		15.50	– 20	type III
	26 ×	6.6		type VII
	32 ×	11.50	– 15	type VIII

Figure 5.13: American and British sizes cod

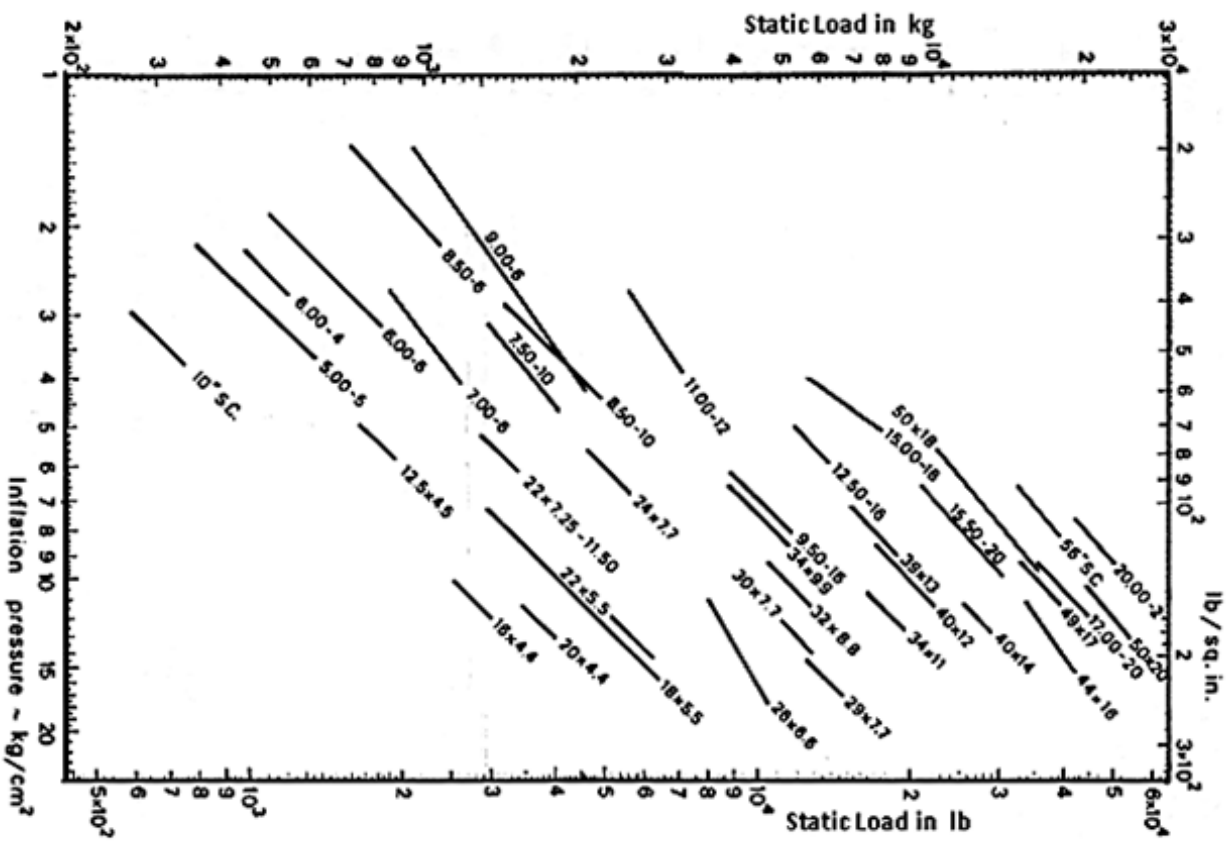

Figure 5.14a: Tire data, American sizes.

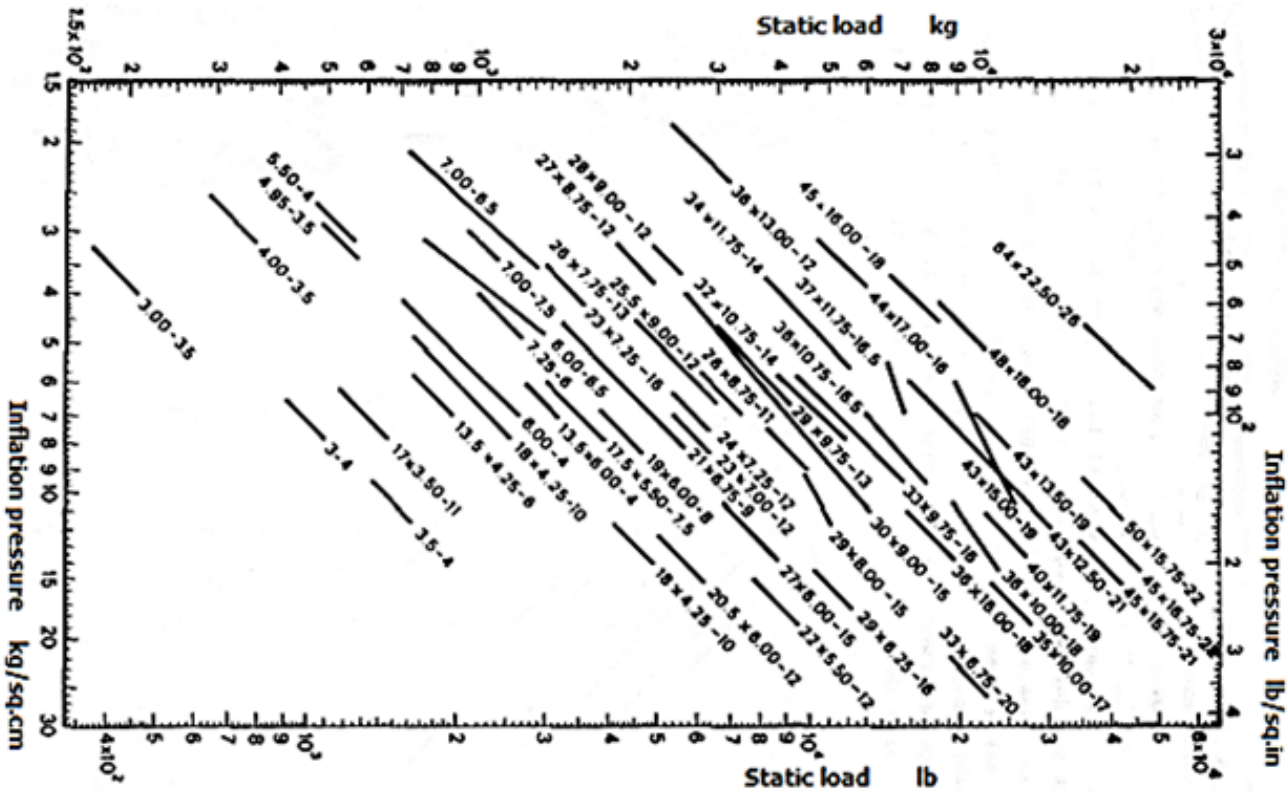

Figure 5.14b: Tire data, British sizes

5.7. Shock absorption:-

Tires and shock absorbers should absorb the kinetic energy of a/c during landing. Total absorbed energy must equal the total kinetic energy produced, see figure (5-8).

$Energy\ absorbed =$ efficiecy $*$ load $*$ distance)

$Energy\ absorbed = \eta * n_L W * \delta = (\eta_t \delta_t + \eta_l \delta_l) n_L W \delta$

$kinetic\ energy\ produced = 0.5 * mass * v_{touch}^2$

$$\therefore\ 0.5 * \frac{W}{g} * v_t^2 = \eta * n_L W * \delta$$

η : Efficiency of process.

n_L : Ground load factor during landing.

W : Resultant normal force or simply landing weight.

δ : Total deflection of" tire + shock absorber"

v_t : Touchdown velocity.

m : a/c mass.

$v_{touch} = v_{ultimate,decent} = 1.2\ v_{decent}$

$v_{decent} = 0.305(5.0 + 0.027 v_s)$

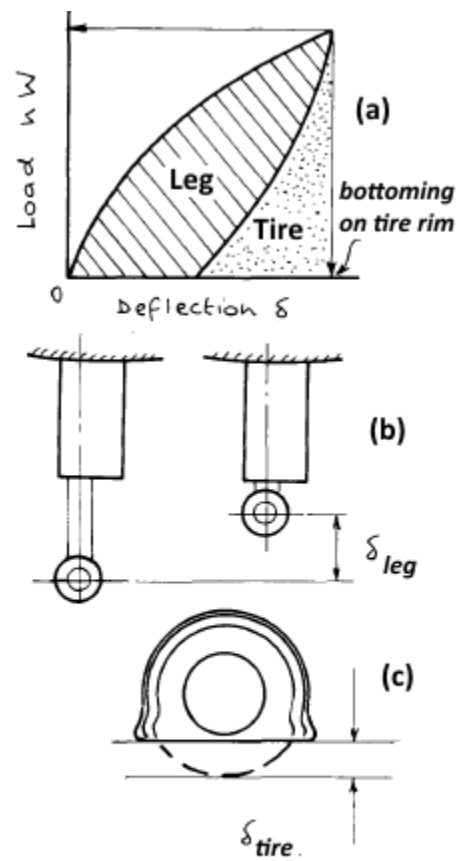

Figure 5.15: Landing gear shock absorption. The energy absorbed is measured by the area under the curves in a.

$$v_{stall} = \sqrt{2(w/s)/(\rho\, C_{L,max})}$$

The vertical touchdown velocity must not exceed $3.05\ m/s$ ($10\ ft/s$) for civilian a/c, and $3.7\ m/s$ ($12\ ft/s$) for military a/c. For good landing on smooth paved surface, the touchdown velocity is about, $v_t = 0.6$ to 0.9 m/s, ($2\ to\ 3\ ft/s$).

Type of shock absorber	efficiency
Tire	0.47
Cantilever	0.50
Compressed rubber rings	0.60
Oleo- pneumatic	0.75

Table 5.5 : typical shock absorber efficiencies

$$\eta\delta = \eta_{tire} * \delta_{tire} + \eta_{leg} * \delta_{leg}$$

$$\delta_{tire} = inflation\ radius - radius\ when\ flat = 0.5(D - d)$$

$$\delta_{leg} = (\eta\delta_{total} + \eta_{tire} * \delta_{tire})/\eta_{leg}$$

Table (5-5) gives a typical value for shock absorber efficiencies. The deflection, (δ_{leg}), is obtained from the manufacturers catalogue. Typical value for (δ_{leg}) is 25.4 to 30.5 cm, (10 to 12 in), which is desirable for most a/c. a value of 20.3cm (8 in) is a minimum deflection for shock absorber.

To calculate deceleration during shock absorption and consumed time:

$$a = \frac{(v_f^2 - v_i^2)}{2\Delta s} \quad ; \quad t = \frac{v_f - v_i}{a}$$

5.8. Ground load factor, n_L:-

The maximum value for ground load factor (n_L) is (1.5 to 2.0) for military transporter and (2.0 to 3.0) for civilian transporter.

If we have chosen the type of tire and shock absorber and the absorption efficiencies are known from table (5.4), then the value of (n_L) is calculated as follow:

$$n_L = \frac{v_{descent,ultimate}^2}{2g(\eta_t\delta_t + \eta_l\delta_l)}$$

Example:-

For the a/c that has the shown data; calculate:

a) Ground load factor.
b) Absorber length for sever touchdown.
c) Deceleration during shock absorption and the time required.

Maximum takeoff weight, $MTOW = 12750\ kg$.
Maximum lift coefficient at landing, $C_{L,max} = 2.5$.
Tire efficiency, $\eta_{tire} = 0.47$
Length of strut, $\delta_{leg} = 20.3\ cm$
Strut absorber eff, $\eta_{leg} = 0.75$
Wing area, $S_W = 47.2\ m^2$.
Air density, $\rho_{air} = 1.225\ kg/m^3$
$n_{L,max} = 3.0$
$v_{touch,max} = 3.05\ m/s$
Tire type (British) $33 * 9.75 - 16$

Sol.

$$\delta_{tire} = 0.5(D - d) = 0.5(33 - 16) = 8.5\ in$$

$$\delta_{tire} = 8.5 * 2.54 = 21.59\ cm$$

$$\eta\delta = (0.2159 * 0.47 + 0.203 * 0.75) = 0.2537$$

$$v_s = \sqrt{\frac{2(w/s)}{\rho_{air} * C_{L,max}}} = \sqrt{\frac{2 * (12750 * 9.81)/47.2}{1.225 * 2.5}}$$

$$v_d = 0.305(5.0 + 0.027 v_s)$$

$$v_d = 0.305(5.0 + 0.027 * 41.6) = 1.87 \ m/s$$

$$v_{ult,d} = 1.2 v_d = 1.2 * 1.87 = 2.24 \ m/s$$

a) Ground load factor.

$$n_L = \frac{v_{ult,d}^2}{2g(\eta_{tire} * \delta_{tire} + \eta_{leg} * \delta_{leg})} = \frac{v_{ult,d}^2}{2g(\eta\delta)}$$

$$= \frac{2.24^2}{2 * 9.81 * 0.2537} = 1.008$$

The value of ground load factor ($n_L = 1.008$) is less than maximum allowable load factor (2.0 – 3.0) which is good.

b) Absorber length for sever touchdown.

$$(\eta\delta) = \frac{v_{ult,d}^2}{2g(n_L)} = \frac{3.05^2}{2 * 9.81 * 3} = 0.158$$

$$\delta_{leg} = \frac{\eta\delta - (\eta_{tire} * \delta_{tire})}{\eta_{leg}} = \frac{0.158 - 0.2159 * 0.47}{0.75} = 7.54 \ cm$$

For sever touchdown ($v_{touch,max} = 3.05 \ m/s$ and $n_{L,max} = 3.0$) the calculated strut absorber length is ($\delta_{leg} = 7.54$ cm) which is less than the maximum allowable length ($\delta_{leg} = 20.8$ cm) which is good too.

c) Deceleration and time during touchdown.

$$a = \frac{(v_f^2 - v_i^2)}{2\Delta s} = \frac{(v_f^2 - v_i^2)}{2(\delta_{tire} + \delta_{leg})} = \frac{(0 - 2.24^2)}{2 * (0.2159 + 0.205)} = -5.961 \ {}^{m}/_{s^2}$$

$$t = \frac{v_f - v_i}{a} = \frac{0 - 2.24}{-5.961} = 0.376 \ s$$

5.8.Ground load at landing:-

Landing gears must be capable of absorbing landing and taxi loads as well as transmit part of these loads to the airframe. The magnitude of these loads depends on the type of airplane as well as on its mission. The reaction force on strut leg for main and nose u.c. is calculated at different landing attitudes. The analysis below is restricted to nose wheel layout of conventional design. For unconventional layouts a full dynamic analysis is necessary. For tail wheel layout reference should be made to the airworthiness standards.

Three types of loads must be considered in the layout design of landing gears:

a. Vertical loads, primarily caused by non-zero touchdown rates and taxiing over rough surfaces.
b. Longitudinal loads primarily caused by 'spin-up' loads, braking loads and rolling friction loads.
c. Lateral loads primarily caused by 'crabbed landings', cross-wind taxiing and ground turning.

5.8.1. Main u.c. analysis:

Seven a/c loading attitudes (cases) should be considered. But the first two are most significant and are considered.

1. Normal landing.
2. Landing with high drag, at stalling angle of attack with main wheels just retouching. This is significant case, i.e. maximum load.
3. One wheel landing.
4. Braked taxing.
5. Turning and steering.
6. Rolling back.
7. Take off.

5.8.2. Nose u.c. analysis:

Six a/c loading attitudes (cases) should be considered. But the first three are considered while the third one is the most significant.

1. Normal landing.
2. Landing with high drag, at stalling angle of attack with main wheels just retouching.
3. Dynamic braking. This is significant case, i.e. maximum load.
4. Maneuvering (brake on one main wheel only).
5. Rolling back.
6. Steering.

Case 1; **Normal landing:-** For normal landing the position of c.g. is at the maximum forward position (no braking force is considered and no deceleration).

- Main u.c:

To evaluate load on one main u.c. assembly (P_m), take moment about point (B), then:-

$$2(\ell_n + \ell_m)P_m + (T - D)H - (nW - L)\ell_n = 0$$

$$2P_m = \frac{(nW-L)\ell_n-(T-D)H}{(\ell_n+\ell_m)}$$

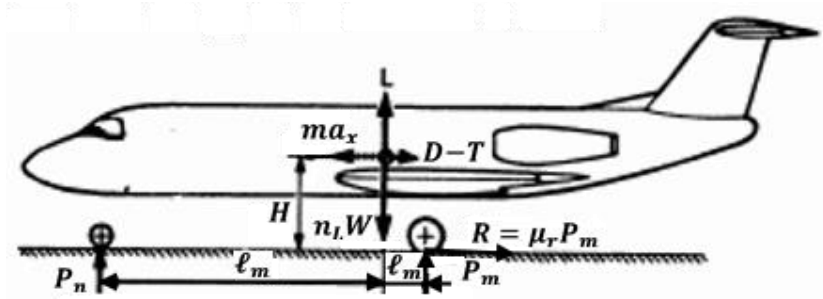

Figure 5.16: Aircraft system of forces during landing

- Nose u.c:

To evaluate load on nose wheel (P_n), take moment about point (A), no braking force is considered, then:-

$$(nW - L)\ell_m + (T - D)h + (\ell_n + \ell_m)P_n = 0$$

$$2P_n = \frac{(nW - L)\ell_m - (T - D)h}{(\ell_n + \ell_m)}$$

For this case the values of (P_m) and (P_n) are both insignificant.

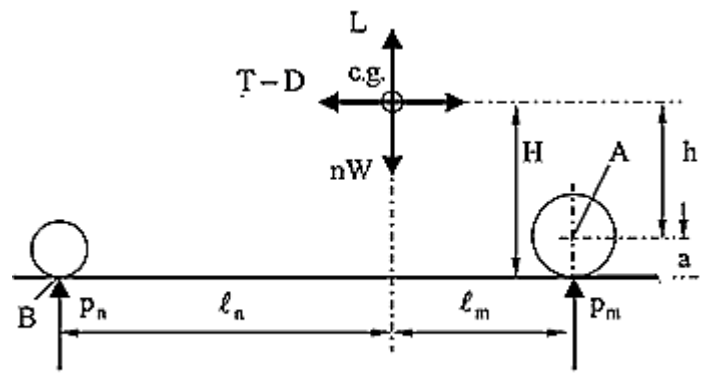

Figure 5.15b: system of forces during normal landing

Case 2: Landing with high drag:- (no braking force is considered and no deceleration). For Landing with high drag the position of c.g. is at the maximum aft position i.e. (ℓ_n increase and $\ell_m$decrease). The above equations are used also. For this case the value (P_m) is significant, while the value of (P_n) is insignificant.

Case 3: Dynamic braking:-

For this case, the braking force and deceleration force should be considered. It is the most significant case for (P_n). The position of c.g. is at the maximum forward position. No calculation for (ℓ_m) is needed. Take moment about (A).

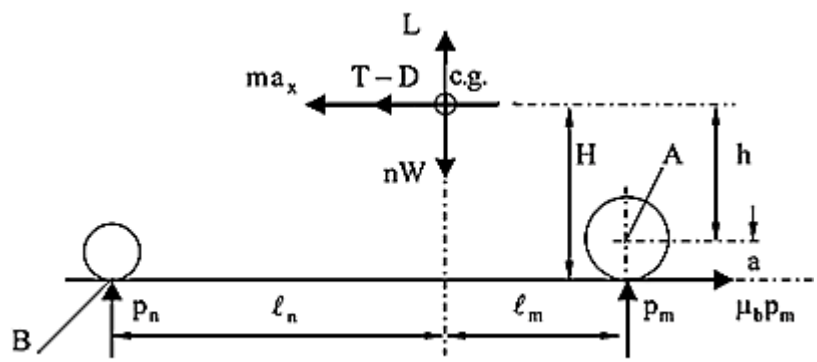

Figure 5.15c: system of forces during landing with dynamic braking

$$p_n = \frac{(nW - L)\ell_m + [ma_x + (T - D)]h + (2\mu_b p_m)a}{(\ell_n + \ell_m)}$$

$$2p_m = (nW - p_n)$$

$$p_n = \frac{(nW - L)\ell_m + [ma_x + (T - D)]h + (\mu_b nW)a}{(\ell_n + \ell_m) + \mu_b a}$$

p_m: Load on main wheel assembly.

p_n: Load on main wheel assembly.

W: Aircraft weight.

n : Load factor at landing.

L : Lift force.

D : Drag force.

T : Thrust force.

m : Aircraft mass, $= W/g$.

a_x : Axial deceleration:

$= 3.433\ m/s^2$ For dry concrete, simple brake system.

$= 4.415\ m/s^2$ For dry concrete, automatic brake pressure system.

μ_{roll} : Rolling friction coefficient.

$= 0.02$ Hard runways, concrete.

$= 0.04$ Hard turf, gravel.

$= 0.05$ Short dry grass.

$= 0.01$ Long grass.

$=0.1 \div 0.3$ Soft ground.

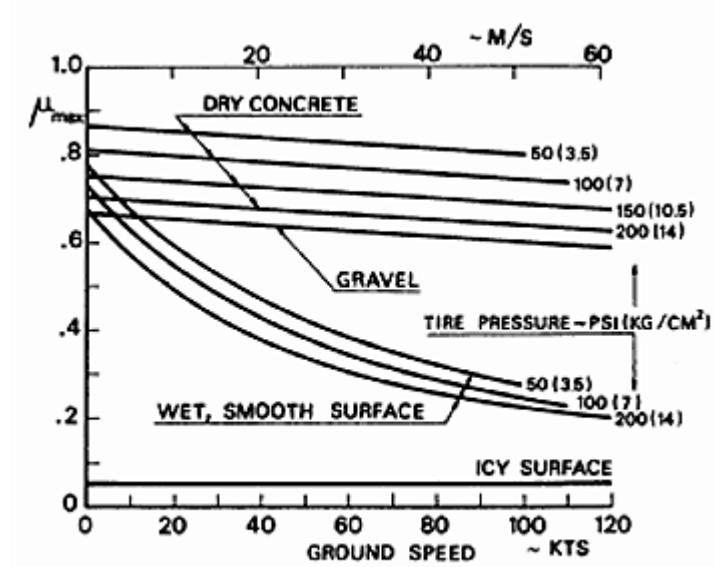

Figure 5.17: Braking coefficient of friction variation with groud speed.

μ_{brack}: braking friction coefficient, which depends on running speed and type of runway pavement.

$= 0.25 \div 0.35$ or $\approx (20 \div 50)\%\ \mu_{b,max}$, See figure (5-17).

5.9. Structural load cases:-

Aircraft structure is subject to different dynamic and static loads during landing. Each ground case imposes a different loads on aircraft structure, but Let as restricted to the following cases only:-

For main u.c.

i. Normal landing.

ii. Landing with high drag.

For nose u.c.

i. Normal landing.

ii. Landing with high drag.

iii. Dynamic braking.

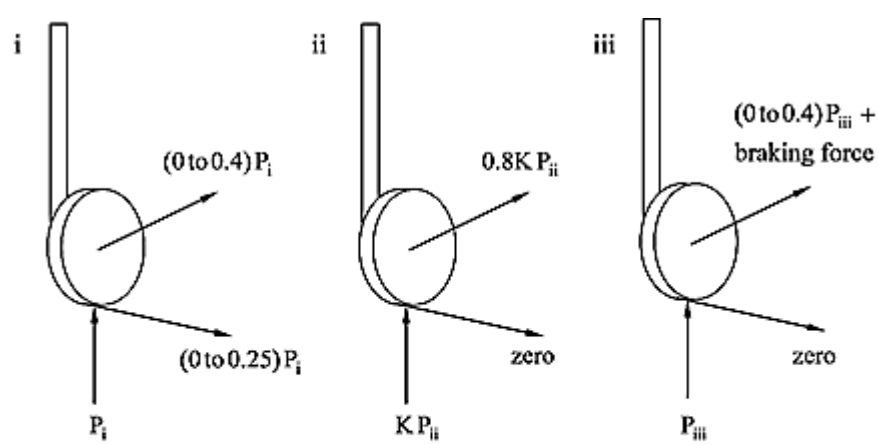

Figure 5.18: Structural load cases

$K = 0.75$ if $V_s > 165$ km/hr

$K = 0.55$ if $V_s < 80$ km/hr

And linear between these limits.

Example:-

Evaluate structural load cases at a stage where thrust equal drag and lift is zero for undercarriage assembly of an a/c that has the following data:

Maximum takeoff weight, $MTOW = 12750\ kg$
Ground load factor, $n_L = 1.2$
Tire type (British) $33 \times 9.75 - 16$
Braking coefficient of friction, $\mu_b = 0.3$
C.g. height is (3.0) above airfield level
C.g. position is (6.5 to 6.9) from nose wheel
Undercarriage base is (7.5 m)
Aircraft deceleration, $a_x = 3.433\ m/s^2$

Solution:

$$33 \times 9.75 - 16$$

$a = \frac{33}{2} = 16.5\ in = 0.491\ m$

$h = 3.0 - 0.4191 = 2.5809\ m$

$n_L W = 12750 \times 9.81 = 150093\ N$

$ma_x = 12750 \times 3.433 = 43770.75\ N$

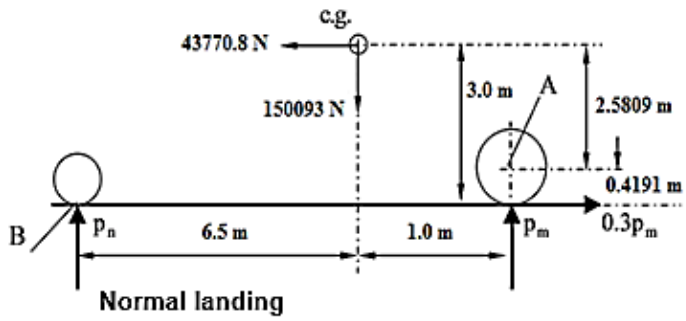

Normal landing

i. Normal landing: no deceleration and braking forces are considered.

Take moment about point B

$2p_m(\ell_m + \ell_n) = n_L W \ell_n$

$$p_m = \frac{\ell_n}{2(\ell_m + \ell_n)} n_L W = \frac{6.5}{2 \times 7.5} \times 150093$$

$= 65040.3\ N\ which\ is\ insignificant.$

Take moment about A

$p_n(\ell_m + \ell_n) = n_L W \ell_m$

$$p_n = \frac{\ell_m}{\ell_m + \ell_n} n_L W = \frac{1.0}{7.5} \times 150093$$

$= 20012.4\ N\ which\ is\ insignificant.$

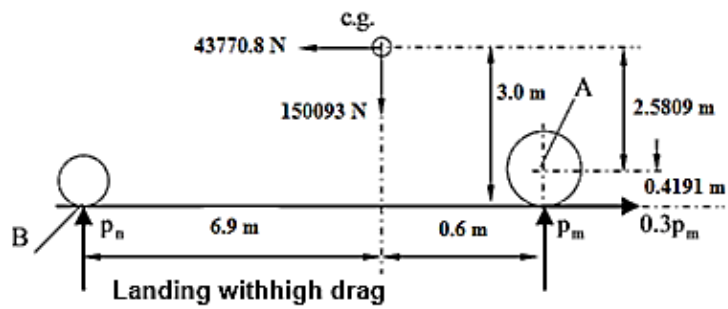

Landing withhigh drag

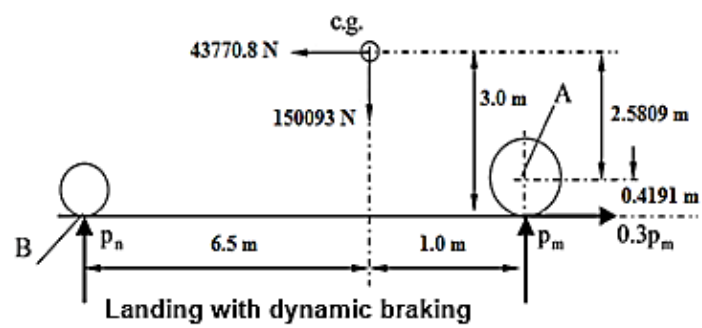

Landing with dynamic braking

ii. Landing with high drag: no deceleration and braking forces are considered.

$$p_m = \frac{\ell_n}{2(\ell_m + \ell_n)} n_L W = \frac{6.9}{2 \times 7.5} \times 150093$$

$= 69042.8\ N\ which\ is\ the\ significant\ case\ for\ the\ main\ wheel$

$$p_n = \frac{\ell_m}{\ell_m + \ell_n} n_L W = \frac{0.6}{7.5} \times 150093 = 12007.4\ N\ which\ is\ insignificant.$$

iii. Dynamic braking:- all other forces should be considered.

$p_n(\ell_n + \ell_m) = (nW - L)\ell_m + [ma_x + (T - D)]h + (2\mu_b p_m)a$

$2p_m = (nW - p_n)$

$$p_n = \frac{(nW - L)\ell_m + [ma_x + (T - D)]h + (\mu_b nW)a}{(\mu_b a + \ell_n + \ell_m)}$$

$$p_n = \frac{150093 \times 1.0 + 43770.75 \times 2.5809 + 0.3 \times 150093 \times 0.4191}{(03 \times 0.4191 + 7.5)}$$

$$p_n = \frac{150093 + 112967.9 + 18871.2}{(7.626)}$$

$$= 36970\ N\ which\ is\ the\ significant\ case\ for\ the\ nose\ wheel$$

Now the loading cases are:-

For main U.C.:- from previous example, $v_s = 41.7\ m/s = 150.12\ km/h$, then

$$K = 0.55 + (0.75 - 0.55)\frac{(150.12 - 80)}{165 - 80} = 0.715$$

		vertical	backward	Side
For main undercarriage	**Normal landing**	$\boldsymbol{p_i}$	**0**	**0**
		$\boldsymbol{p_i}$	$\boldsymbol{0.4p_i}$	**0**
		$\boldsymbol{p_i}$	**0**	$\boldsymbol{0.25p_i}$
		$\boldsymbol{p_i}$	$\boldsymbol{0.4p_i}$	$\boldsymbol{0.25p_i}$
	High drag landing	$\boldsymbol{Kp_{ii}}$	$\boldsymbol{0.8Kp_{ii}}$	**0**
	Dynamic breaking	$\boldsymbol{p_{iii}}$	**0**	**0**
		$\boldsymbol{p_{iii}}$	$\boldsymbol{0.4Kp_{ii}}$	**0**

		vertical	backward	Side
For nose undercarriage	**Normal landing**	$\boldsymbol{65040.3\ N}$	**0**	**0**
		$\boldsymbol{65040.3\ N}$	$\boldsymbol{26016\ N}$	**0**
		$\boldsymbol{65040.3\ N}$	**0**	$\boldsymbol{16260\ N}$
		$\boldsymbol{65040.3\ N}$	$\boldsymbol{26016\ N}$	$\boldsymbol{16260\ N}$
	High drag landing	$\boldsymbol{49365.6\ N}$	$\boldsymbol{39492.5\ N}$	**0**
	Normal landing	**vertical**	**backward**	**Side**
		$\boldsymbol{20012.4\ N}$	**0**	**0**
		$\boldsymbol{20012.4\ N}$	$\boldsymbol{8004.96\ N}$	**0**
		$\boldsymbol{20012.4\ N}$	**0**	$\boldsymbol{5003.1\ N}$
		$\boldsymbol{20012.4\ N}$	$\boldsymbol{8004.96\ N}$	$\boldsymbol{5003.1\ N}$
	High drag landing	**8583.14 N**	$\boldsymbol{6866.5\ N}$	**0**
	Dynamic breaking	$\boldsymbol{36970\ N}$	**0**	**0**
		$\boldsymbol{36970\ N}$	$\boldsymbol{14788\ N}$	**0**

5.10. U.C. Weight:-

For conventional type, the weight of each U.C. (gear) can be subdivided into:-

i. Wheels, brakes, tires tubes and air.
ii. Main structure, i.e. leg and struts.
iii. Other items such as the retraction mechanism.

The first part of the weight prediction process is to be decided upon tire and wheel size, inflation pressure, location of the U.C., length of the leg, etc. the weight of conventional U.C. may be found by summation of the main U.C. and noise U.C. weights. Each is predicted separately with the following expression:- according to Torenbeek:

$$W_{u.c.} = \left(A + B \times W_{t.o}^{3/4} + CW_{t.o} + D \times W_{t.o}^{3/4}\right)$$

$$K_{u.c.} = 1.0 \; for \; low \; wing \; a/c$$

$$K_{u.c.} = 1.08 \; for \; high \; wing \; a/c$$

The values of constants A, B, C and D based on statistical evaluation of data on U.C. of existing a/c. see table (5-5).

It can be argued that in many a/c the critical load is formed by the landing impact load and that the MLW should therefore be used to predict the undercarriage weight. A reasonable approximation for weight of retractable undercarriage is 4.7% MLW.

a/c category	U.C. configuration		A	B	C	D
Jet propelled trainers and executives	Retractable	Main	33 (15.0)	0.04 (0.033)	0.021	-
		Nose	12 (5.4)	0.06 (0.049)	-	-
All other civil types	Fixed	Main	20 (09.1)	0.10 (0.082)	0.019	
		Nose	25 (11.3)	-	0.0024	
		Tail	9 (04.1)	-	0.0024	
	Retractable	Main	40 (18.1)	0.16 (0.131)	0.019	1.5 $(2.23e^{-5})$
		Nose	20 (09.1)	0.01 (0.082)	-	3.0 $(2.97e^{-6})$
		Tail	5 (02.3)	-	0.0031	

Table 5.5 Coefficients for the calculation of undercarriage weight in lb. (kg.)

6. Preliminary Weight analysis

6.1. General:

The weight predication in preliminary design stage is always of rational analysis and statistical methods. The main reason being that many design details are still not known at the moment of design.

Most aircraft manufacturers develop their own method of weight prediction which is based on their experience with each particular type of a/c. however some of the simple methods discussed here have a predictive accuracy of 5% to 10% of standard error for the major weight ground.

Typical sources of accounting differences (error) can be observed in the wing-fuselage interconnection, fairing at root and in retractable u.c. structures such as wheel-doors and equipment cowls.

6.2. Weight breakdown:

The following weight breakdown is useful

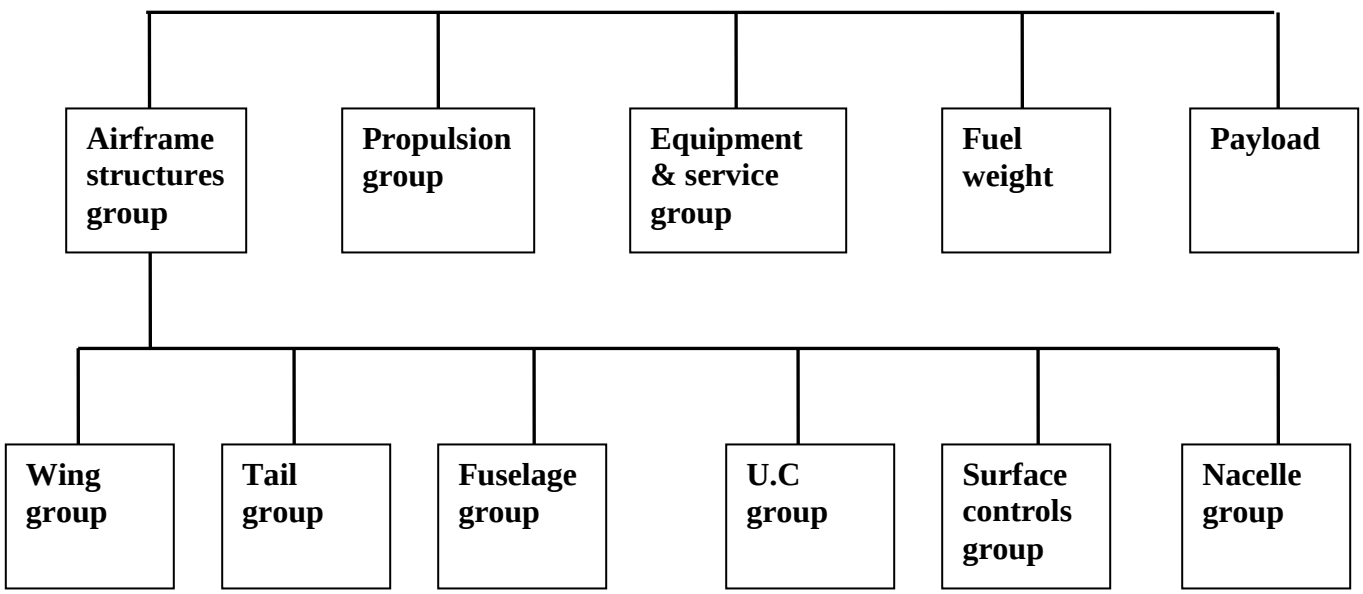

Some airframe structures, (wing, tail, fuselage, u.c.) have been computed earlier so the remainder will be discussed here. All calculated data for structural weights should be laid down in a table similar to table (6.1). Table (6.2) gives weight breakdown for structure group for different aircrafts. The weight breakdown methods listed here are mainly due to Torenbeek methods.

6.3. Surface controls group:

The weight of surface controls is generally $(0.8 - 2.0)\%\ MTOW$. An approximation is:-

$W_{sc} = K_{sc} W_{t.o}^{2/3} \quad in\ kg.$

$k_{SC} = 0.23 * 0.768,$ Transport, trainer's a/c manually controlled.

$k_{SC} = 0.44 * 0.768,$ Light a/c without duplicate system control.

$k_{SC} = 0.64 * 0.768,$ Transport a/c with powered control and T.E. high lift devices only.

Added 20% for leading-edge flap or slat controls, And Added 15% for lift dumper controls, if used.

6.4. Engine section or nacelle group:-

$W_N = 1.134\sqrt{P_{T.O}}$ Light a/c, single tractor propeller in the fuselage nose.

$W_N = 0.145 * P_{T.O}$ Multi-engines a/c, reciprocating engines horizontally opposed cylinders

$W_N = 0.0204\, P_{T.O}^{5/4}$ Other reciprocating engines. Where $P_{T.O.}$ $is\ BHP$ at takeoff..

$W_N = 0.0635(ESHP)_{T.O}$ Aircraft with turboprop engine. Added

$0.018\, ESHP$ if main u.c. retractable into the nacelle.

$0.050\, ESHP$ for over wing exhaust.

$W_N = 0.055T)_{T.O}$ Aircraft with pod mounted turbojet and turbo-fan engines.

$W_N = 0.065T)_{T.O}$ High by pass turbo-fan engines with short fan duct. Added 20% for quit turbo-fan pod.

6.5. Propulsion group:

- For propeller a/c. $W_P = K_p N_E (W_E + 0.109 P_{T.O})$
- For jet a/c. $W_P = K_P K_{TH} N_E W_E$

Engine weight, W_E, should be taken directly from manufacturer. N_E is engine number.

K_P = 1.16 Single tractor propeller in fuselage.
= 1.35 Multi-engines, propeller a/c.
= 1.15 Jet transporter, podded engines.
= 1.4 Light jet a/c, buried engines.

K_{TH} = 1.00 No thrust reversers installed.
= 1.18 with thrust reversers.

Added 1.5% for jet with water injection.
3.0% for propeller a/c with water

6.6. Airframe services and equipment:

For preliminary design stage the following typical average weight ratios are acceptable:

Light single engine, private a/c	08%	$MTOW$.
Light twin-engines a/c	11%	=.
Jet trainers	13%	=.
Short range transports	14%	=.
Medium range transports	11%	=.
Long range transports	08%	=.

For more details, this item can be subdivided into:-

- ***APU* group**, Auxiliary Power Unit. The APU is installed in most modern transport aircraft and also in some jet executives. Its engine weight can be obtained from its specification once it has been chosen.

$W_{APU} = 11.7\,\dot{W}_{ba}^{3/5}$ in kg, An APU

$\dot{w}_{ba}$ is the bleed airflow of $APU, \approx 0.4 - 0.5\,kg/min\,/passenger$.

$W_{APU,group} = (2 - 2.5)W_{APU}$

- **Instruments and electronics group:-**

$W_{ieg} = 18.1 + 0.008\,W_{TO}$	For propeller powered a/c where $MTOW < 5670$.
$W_{ieg} = 54.4 + 9.1\,N_e + 0.006\,W_{TO}$	Low subsonic transports with manual flight control system and low subsonic jet trainers.
$W_{ieg} = 0.347\,W_{DE}^{5/9} R_D^{1/4}$	High subsonic jet transports with duplicated NAV/COM equipment and high subsonic trainers. W_{DE} is delivery empty weight in kg and R_D is the maximum range in km.

- **Hydraulic, pneumatic and electrical group:-**

$W_{hpeg} = 0.00914\,W_E^{6/5}$	Utility a/c
$W_{hpeg} = 0.064\,W_E$	Jet trainers
$W_{hpeg} = 0.277\,W_E^{4/5}$	Propeller transport

- **Furnishing and equipment group:**

$W_{f\&eg} = 0.196\,W_{MZF}^{0.91}$	W_{MZF} is maximum zero fuel weight.

- **Air-conditioning and anti-icing group:-**

$W_{ac\&icg} = 1.1 * number\ of\ seat$	Light, single a/c.
$W_{ac\&icg} = 0.018\,W_{DE}$	Multi-engines un pressurized a/c.
$W_{ac\&icg} = 1.4\,\ell_{pc}^{1.28}$	Pressurized a/c and executive a/c. ℓ_{pc} is length of passenger cabin in (m).

- **Miscellaneous:-**

Auxiliary gears, photographic equipment, external paint, unaccounted items, unexpected weight growth…etc.

$W_{misc} = 0.01\,W_{DE}$

W_{DE}, Delivery empty weight is the weight of the airplane as produced and delivered by the manufacturer. It is equal to the Manufacturer's Empty Weight plus the weight of Standard (Removable) Items.

6.7. Useful load and all-up weight:

a) **Operational items:** For private a/c and jet trainer, the only item of interest is the residual fuel and oil only. Table 6.1 details the operational items.

ITEM	SUBDIVISION	METHOD		REMARKS, SYMBOLS
CREW PROVISIONS	flight and cabin crew with baggage, flight equipment	$205\ (93) \times N_{fc} + 150\ (68) \times N_{cc}$		N_{fc}, N_{cc} = number of flight/ cabin crew members respectively
PASSENGER CABIN SUPPLIES	removable galley bar equipment, meal service, consumable food, drinks, beverages pillows, papers and magazines, entertainment	commuters: 1 ℓb (.453 kg) x N_{pax} transport aircraft, snacks only : 5ℓb (2.27kg).N_{pax} main meal, short-range: 14ℓb (6.35kg).N_{pax} , long -range: 19ℓb (8.62kg).N_{pax}		N_{pax} = number of passengers, all-tourist. First class: all data 5ℓb (2.27kg) per passenger higher
POTABLE WATER AND TOILET CHEMICALS		short range : $80N_{wc}$ or $1.5N_{pax}$∿ℓb ($36.3\ N_{wc}$ or $.68N_{pax}$∿kg) short/medium-range: $120N_{wc}$ or $3.0N_{pax}$∿ℓb ($54.4\ N_{wc}$ or $1.36N_{pax}$∿kg) long-range : $200N_{wc}$ or $6.5N_{pax}$∿ℓb ($90.7\ N_{wc}$ or $2.95N_{pax}$∿kg)		
SAFETY EQUIPMENT	life jackets, fire axes, emergency navigational equipment	short or no overwater sectors: $2N_{pax}$∿ℓb ($.907N_{pax}$∿kg) extended overwater flights: $7.5N_{pax}$∿ℓb ($3.4N_{pax}$∿kg)		N_{wc} = number of toilets/water closets; data based on all- tourist layout
OIL RESIDUAL FUEL WATER/ METHANOL	residual fuel	gas turbine engines: $.81\ (.151) \times V_{ft}^{2/3}$	reciprocating: $.008\ W_{to}$	V_{ft} = total fuel tank capacity ∿ U.S. gal. (liters) W_{to} = Max. Takeoff Weight ∿ ℓb (kg) W_f = fuel weight ∿ ℓb (kg)
	residual oil	turboprop engines: $.81\ (.151) \times V_{ft}^{2/3}$		
	engine oil consumed		$.045\ W_f$	
	water/methanol	optional		
CARGO HANDLING EQUIPMENT	pallets, containers, cargo tiedown eqpt.	**Standards, see Torenbeek Figure 3-20**		ALL WEIGHTS IN LB (KG)

Table 6.1: Operational items weight

---

b) Crew weight: The number of crew will depend on aircraft size and number of passenger. The number of crew can be considered into categories:

Mass of crew number including allowance for baggage and flight documents is (85 kg/persons).

- Flight desk crew.

$Minimum\ crew\ number\ = 1\ \ if\ MTOW < 12500\ LB.$

$Minimum\ crew\ number\ = 2\ \ if\ 12500 < MTOW < 85000\ LB.$

$Minimum\ crew\ number\ = 3\ \ if\ MTOW > 85000\ LB.$

- Cabin crew. Cabin crew numbers are directly a function of number of passengers and operators policy, but usually in the following ratio:

$Number\ of\ cabin\ crew\ = 0.03 * N_{pass}$ where N_{pass} is number of passengers.

c) Payload:

- Passengers. For passengers the number of passengers is specified and their mass is:

$M_{Pass} = J_P \times N_{pass}$, where $(J_P = 93 - 102\ kg)$ which is the weight of individual passenger includes personal baggage allowance.

- Cargo weight. For fright the mass required to be transported is specified, (M_{fright}).

In some cases a mixture of fright and passengers is specified, hence total payload mass is:

$M_{payload} = M_{Pass} + M_{Fr}$

	LB	KG	
PASSENGERS :	165	75	
PASS. BAGGAGE :	40	18	- TOURIST CLASS
	60	27	- FIRST CLASS
BAGGAGE SPEC. DENSITY :	12 LB/FT^3 (192 KG/M^3)		

FUEL	SPECIFIC HEAT BTU/LB	SPECIFIC HEAT KCAL/KG	SPECIFIC WEIGHT* LB/U.S. GAL	SPECIFIC WEIGHT* KG/LITER
GASOLINE :	18,700	10,389	5.85	.701
JP - 3 :	18,000	10,000	6.32	.767
JP - 4 :	18,550	10,305	6.50	.779
JP - 5 :	18,400	10,222	6.84	.820

LUBRICATING OIL SPECIFIC WEIGHT: 7.5 LB/U.S. GAL (.9 KG/LTR)

* AT 59°F (15°C)

Table 6.2: Standard weights of payload, fuel and oil

6.8. Fuel weight:

There two general methods for calculating fuel mass. The first one depends on flight stages and it is more reliable. The second one depends on statistical data and it is more rapid. Both methods are considered.

6.8.1. First method:

Fuel mass is subdivided into used and reserve fuel:-

$W_F = W_{F,used} + W_{F,reserve}$

- The used fuel is subdivided into

$W_{F,used} = W_{tax} + W_{takeoff} + W_{climb} + W_{cruise} + W_{des} + W_{loit} + W_{diver} + W_{tax} + W_{land}$

Fuel reserves are normally specified in the mission specification. They are also specified in those Airworthiness requirements which regulate the operation of passenger transports. Fuel reserves are generally specified in one or more of the following types:

- As a fraction of $W_{F,used}$.
- As a requirement for additional range so that an alternate airport can be reached.
- As a requirement for (additional) loiter time.

The fuel-fraction method is used to determine $W_{F,used}$. In this method the airplane mission is broken down into a number of mission phases. The fuel used during each phase is found from a simple calculation or estimated on the basis of experience. The following general flight phases are.

a) Taxing, take-off.
b) Climb.
c) Cruise.
d) Descend.
e) Landing, taxing.
f) Diversion.
g) Holding (loitering).

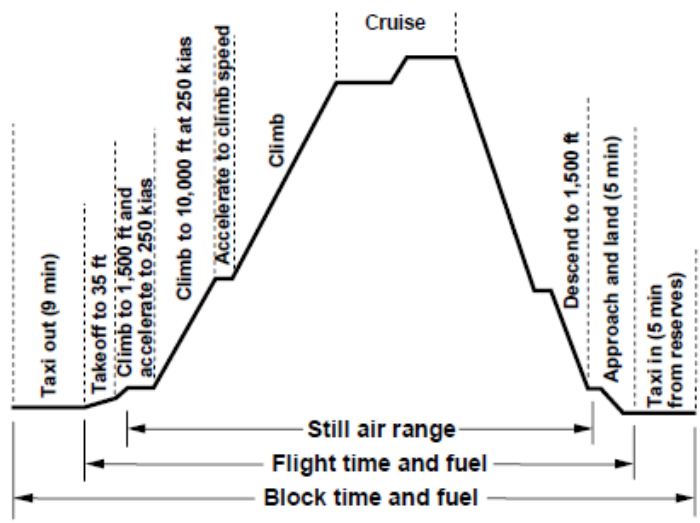

Figure 6.1: Typical mission profile

Figure 6.1 defines the mission profile for this airplane. It observed that the mission profile is broken down into a number of mission phases. Each phase has a number. Each phase also has a begin weight and an end weight associated with it. The method of Roskam is adopted here.

a) Phase 1: Engine start and warm-up.

Begin weight is $MTOW$ and end weight is w_1. The fuel-fraction for this phase is $w_1/MTOW$.

b) Phase 2: Taxi.

Begin weight is w_1 and end weight is w_2, The fuel-fraction for this phase is w_2/w_1. See table 6.3

---

c) Phase 3: Take-off.

Begin weight is $w_2$and end weight is w_3. The fuel-fraction for this phase is w_3/w_2. See table 6.3

d) Phase 4: Climb:

Climbing to cruise altitude and then accelerating to cruise speed. Begin weight is w_3 and end weight is w_4. The fuel fraction for this phase is w_4/w_5. However, in some cases it is desirable to calculate this fraction from Breguet's equation for endurance.

For propeller driven:

$$Endurance = 375\left(\frac{1}{V_{cl}}\right)\left(\frac{\eta_p}{c_p}\right)_{cl}\left(\frac{L}{D}\right)_{cl}\ln\left(\frac{w_4}{w_3}\right) \qquad V_{cl}\ is\ in\ mph.$$

For jet a/c

$$Endurance = \left(\frac{1}{c_j}\right)_{cl}\left(\frac{L}{D}\right)_{cl}\ln\left(\frac{w_4}{w_3}\right)$$

Values during the climb for V_{cl}, $(\eta_p/c_p)_{cl}$, $(1/c_j)_{cl}$ and for $(L/D)_{cl}$ are from table 6.12. E_{cl} is equal to the time to climb, usually expressed as a fraction of an hour. This can be found in turn by assuming a value for the average rate-of-climb. The altitude at the end of the climb (usually referred to as the cruise or loiter altitude) is normally provided in the airplane mission specification. Methods for rapid evaluation of climb performance are discussed in Chapter 3.

e) Phase 5: Cruise.

Begin weight is w_4 and end weight is w_5. The ratio w_5/w_4 can be estimated from Breguet's range equation

For propeller driven:

$$R_{cr} = 375\left(\frac{\eta_p}{c_p}\right)_{cr}\left(\frac{L}{D}\right)_{cr}\ln\left(\frac{w_4}{w_5}\right) \qquad R_{cr}\ is\ in\ miles$$

Mile, also called statute mile, equals to 5280 feet, or 1760 yards (1.609 kilometers)

For jet a/c

$$R_{cr} = \left(\frac{V}{c_j}\right)_{cr}\left(\frac{L}{D}\right)_{cr}\ln\left(\frac{w_4}{w_5}\right) \qquad R_{cr}\ is\ in\ n.m.$$

Nautical mile, also called sea mile, equals to 1,852 meters (about 6,076 feet).

Values for $(\eta_p/c_p)_{cr}$, for $c_{j,cr}$ and for $(L/D)_{cr}$ may again be obtained from Table 6.4. Values for R_{cr} and for V_{cr} are usually given in the mission specification.

f) Phase 6: Loiter.

Begin weight is w_5 and end weight is w_6. The fuel-fraction w_6/w_5 can be found with the help of Breguet's endurance equation:

For propeller driven:

$$E_{ltr} = 375\left(\frac{1}{V_{ltr}}\right)\left(\frac{\eta_p}{c_p}\right)_{ltr}\left(\frac{L}{D}\right)_{ltr}\ln\left(\frac{w_5}{w_6}\right) \qquad V_{ltr}\ is\ in\ mph.$$

For jet a/c

$$E_{ltr} = \left(\frac{1}{c_j}\right)_{ltr}\left(\frac{L}{D}\right)_{ltr}\ln\left(\frac{w_5}{w_6}\right)$$

Note, that E_{ltr} is usually expressed in hours, atypical value according to airworthiness requirement is (30-45) minutes at altitude $1500\ ft\ (457\ m)$. Values for $(\eta_p/c_p)_{ltr}$, $(1/c_j)_{ltr}$ and for $(L/D)_{ltr}$ are from table 6.4. Values for V_{ltr} and for E_{ltr} are often given in the mission specification.

g) Phase 7: Descent.

Begin weight is w_6 and end weight is w_7. The fuel-fraction w_6/w_7 may be found from Table 6.3.

h) Phase 8: Fly to alternate (diversion).

Begin weight is w_7 and end weight is w_8. The ratio w_8/w_7 can be estimated from Breguet's range equation. Diversion distance is usually specified by Airworthiness requirements. This distance equal to 200 n.m (370 km).

For propeller driven:

$$R_{alt} = 375\left(\frac{\eta_p}{c_p}\right)_{alt}\left(\frac{L}{D}\right)_{alt}\ln\left(\frac{w_8}{w_7}\right) \qquad R_{alt}\ is\ in\ miles$$

For jet a/c

$$R_{alt} = \left(\frac{V}{c_j}\right)_{alt}\left(\frac{L}{D}\right)_{alt}\ln\left(\frac{w_8}{w_7}\right) \qquad R_{alt}\ is\ in\ n.m.$$

Values for $(\eta_p/c_p)_{alt}$, for $c_{j,alt}$ and for $(L/D)_{alt}$ may again be obtained from Table 6.4. Values for R_{alt} and for V_{alt} are usually given in the mission specification. This time however, because of the short distance to fly, it will not be possible to reach an economical cruise altitude. It will be assumed, that for the cruise to alternate $(L/D)_{alt} = 10$ and $c_{j,alt} = 0.9\ N/N.hr$ for jet a/c and $0.7\ lb_f/lb_f.hr$ for propeller a/c. Because the flight to alternate will probably be carried out at or below 10,000 ft, $V_{alt} = 250\ kts$ in accordance with FAA regulations. With these data it is found that $w_8/w_7 = 0.965$. No consideration was taken for the descent into the alternate airport.

h) Phase 8: Landing, taxi and shut-down.

Begin weight is w_8 and end weight is w_9. The fuel-fraction w_9/w_8 may be found from Table 6.3.

It is now possible to calculate the mission fuel-fraction, M_{ff} from:

$$M_{ff} = \frac{w_1}{MTOW}\times\frac{w_2}{w_1}\times\frac{w_3}{w_2}\times\frac{w_4}{w_3}\times\frac{w_5}{w_4}\times\frac{w_6}{w_5}\times\frac{w_7}{w_6}\times\frac{w_8}{w_7}\times\frac{w_9}{w_8}$$

The fuel used during the mission, $w_{f,used}$ can be found from:

$$w_{f,used} = (1 - M_{ff})MTOW$$

- **The reserve fuel:** is calculated according to reserve fuel policy. But since it devoted for loitering (holding) and flying to alternate airport (diversion) and these two items are included in the used fuel, the the reserve fuel may assumed zero.The fuel weight w_f is;

$$w_f = w_{f,used} + w_{f,reserve}$$

Mission Phase No. (See Fig.2.1) / Airplane Type:	Engine Start, Warm-up 1	Taxi 2	Take-off 3	Climb 4	Descent 7	Landing Taxi, Shutdown 8
1. Homebuilt	0.998	0.998	0.998	0.995	0.995	0.995
2. Single Engine	0.995	0.997	0.998	0.992	0.995	0.993
3. Twin Engine	0.992	0.996	0.996	0.990	0.992	0.992
4. Agricultural	0.996	0.995	0.996	0.998	0.999	0.998
5. Business Jets	0.990	0.995	0.995	0.980	0.990	0.992
6. Regional TBP's	0.990	0.995	0.995	0.985	0.985	0.995
7. Transport Jets	0.990	0.990	0.995	0.980	0.990	0.992
8. Military Trainers	0.990	0.990	0.990	0.980	0.990	0.995
9. Fighters	0.990	0.990	0.990	0.96-0.90	0.990	0.995
10. Mil.Patrol, Bomb, Transport	0.990	0.990	0.995	0.980	0.990	0.992
11. Flying Boats, Amphibious, Float Airplanes	0.992	0.990	0.996	0.985	0.990	0.990
12. Supersonic Cruise	0.990	0.995	0.995	0.92-0.87	0.985	0.992

Notes: The numbers in this table are based on experience or on judgment.

Table 6.3: Suggested Fuel-Fractions For Several Mission Phases

Mission Phase No. (See Fig.2.1) / Airplane Type	Cruise L/D	Cruise c_j (lbs/lbs/hr)	Cruise c_p (lbs/hp/hr)	Cruise η_p	Loiter L/D	Loiter c_j (lbs/lbs/hr)	Loiter c_p (lbs/hp/hr)	Loiter η_p
	5				6			
1. Homebuilt	8-10*		0.6-0.8	0.7	10-12		0.5-0.7	0.6
2. Single Engine	8-10		0.5-0.7	0.8	10-12		0.5-0.7	0.7
3. Twin Engine	8-10		0.5-0.7	0.82	9-11		0.5-0.7	0.72
4. Agricultural	5-7		0.5-0.7	0.82	8-10		0.5-0.7	0.72
5. Business Jets	10-12	0.5-0.9			12-14	0.4-0.6		
6. Regional TBP's	11-13		0.4-0.6	0.85	14-16		0.5-0.7	0.77
7. Transport Jets	13-15	0.5-0.9			14-18	0.4-0.6		
8. Military Trainers	8-10	0.5-1.0	0.4-0.6	0.82	10-14	0.4-0.6	0.5-0.7	0.77
9. Fighters	4-7	0.6-1.4	0.5-0.7	0.82	6-9	0.6-0.8	0.5-0.7	0.77
10. Mil.Patrol, Bomb, Transport	13-15	0.5-0.9	0.4-0.7	0.82	14-18	0.4-0.6	0.5-0.7	0.77
11. Flying Boats, Amphibious, Float Airplanes	10-12	0.5-0.9	0.5-0.7	0.82	13-15	0.4-0.6	0.5-0.7	0.77
12. Supersonic Cruise	4-6	0.7-1.5			7-9	0.6-0.8		

Notes: The numbers in this table represent ranges based on existing engines.

Table 6.4: Suggested Values For L/D, c_j, η_p, And For c_p For Several Mission Phases

6.8.2. Second method:

Fuel mass can also be estimated from the following simple method, according to Torenbeek:

- **Light aircraft with piston engine:**

$$\frac{W_f}{W_{t.o}} = c * \frac{R}{1000} * R_{u.c.} * AR^{-0.5} + 0.035$$

c = 0.31 when R in n.m.
= 0.17 when R in km.
R_{uc} = 1.35 fixed u.c. no streamlined wheel fairing.
= 1.25 = = with = = =.
= 1.08 main u.c. retracted into streamlined fairing on the fuselage.
= 1.03 main u.c retraced into nacelles.
= 1.0 main u.c. retracted into the fuselage.
R: Range in n.m. or km.

- **Turbo-propeller aircraft.**

Figure 6.2, is used to evaluate the total fuel weight as a fraction of a/c maximum takeoff weight.

Where:

(C_p) is specific fuel consumption in ($kg/HP/h$)

(R) is range in (km)

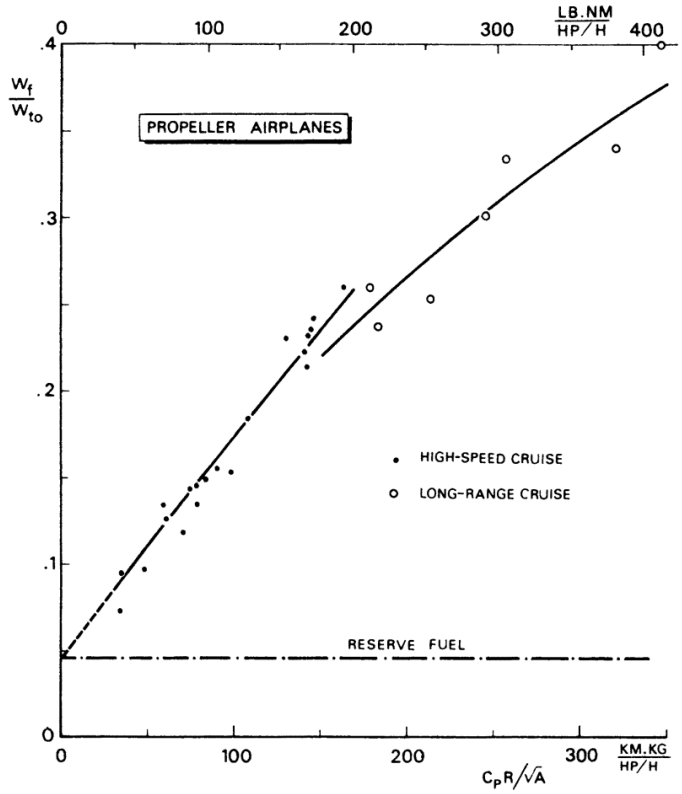

Figure 6.2: Fuel fraction weight for turboprop aircraft

- **Turbo-jet aircraft:**

The fuel is split into:

i. Trip fuel, which can be evaluated from figure 6.3.
ii. Reserve fuel which is estimated as:

$$\frac{W_f}{W_{t.o}} = 0.18 * \frac{C_T/\sqrt{\theta}}{\sqrt{A}}$$

C_T : $s.f.c.in\ 1/s.$

θ : Relative atmospheric temp T/T_o

A : Aspect ratio

R : Range

a_o : Speed of sound at SL, ISA

$\bar{C}_F$: Skin friction coefficient based on wetted area

= 0.0030 Large, long-range transporter.

= 0.0035 Small, short range transporter.

= 0.0040 business and executive gets.

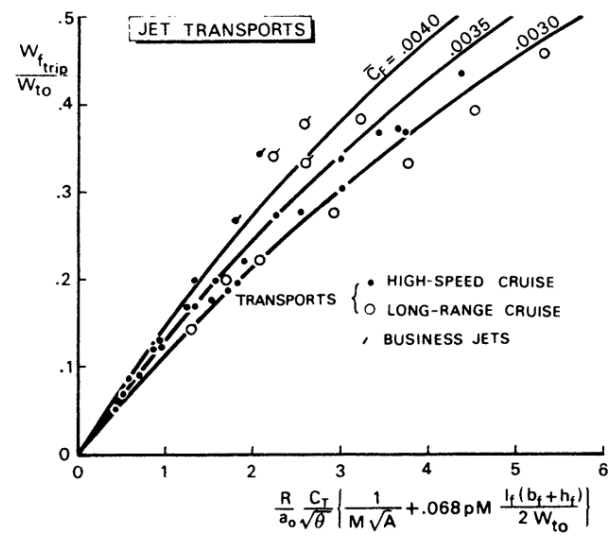

Figure 6.3: Fuel fraction weight for jet aircraft

---

p : Ambient pressure.

M : Mach number.

$b_f, h_f and\ l_f$: Maximum width, height and length of fuselage.

Aircraft maximum takeoff weight is:

$$MTOW = W_{\substack{Structure\\group}} + W_{\substack{propulsion\\group}} + W_{\substack{Equi.and\ Ser.\\group}} + W_{Fuel} + W_{Payload}$$

6.9. Weight guesstimates method: (according to Torenbeek).

The take-off weight is the sum of operating empty weight, payload and fuel weight

$$W_{To} = W_{emp} + W_{Pay} + W_{Fuel}$$

The empty weight can be considered as the sum of a fixed weight and a variable weight

$$W_{emp} = W_{Fix} + W_{Var}$$

$$W_{To} = W_{Fix} + W_{Var} + W_{Pay} + W_{Fuel}$$

$$W_{To}\left(1 - \frac{W_{Var}}{W_{To}} - \frac{W_{Fuel}}{W_{To}}\right) = W_{Fix} + W_{Pay}$$

$$W_{To} = \frac{W_{Pay} + W_{Fix}}{1 - \frac{W_{Var}}{W_{To}} - \frac{W_{Fuel}}{W_{To}}}$$

a) For light a/c with piston engines.

$$W_{fixed} = W_{engine}$$

$$\frac{W_{Var}}{W_{To}} = 0.45\ \ fixed\ u.c.$$

$$= 0.47\ retractable\ u.c.$$

$$= 0.50\ utility$$

The empty weight of light aircraft ($W_{t.o.} < 12550\ lb, (5670\ kg)$), is roughly about 60% of the takeoff weight, hence:

$$W_{To} = \frac{W_{Pay}}{0.4 - \frac{W_{Fuel}}{W_{To}}}$$

b) Turbo-propeller and Turbojet

For transport aircraft ($W_{t.o.} > 12550\ lb, (5670\ kg)$), the accuracy of the empty weight prediction can be improved by splitting it into:

(i) The weight of the dry engine.

(ii) A fixed weight of approximately $1.100\ lb\ (450\ kg)$.

(iii) A constant fraction of takeoff weight mainly associated with wing structure, undercarriage and fuselage size.

Then:

$$W_{To} = \frac{W_{Pay} + W_{Eng} + W_{Fix} + \Delta W_{emp}}{0.8 - \frac{W_{Fuel}}{W_{To}}}$$

Trip fuel fraction from figures 6.2 and 6.3 while reserve fuel fraction as before. ΔW_{emp} is derived from figure 6.4 and W_{Fix} is equal to $1100\ lb$ $(500\ kg)$. The engine weight is known once the engine is chosen. Otherwise 4 to 6% of the takeoff weight may be assumed as a typical value.

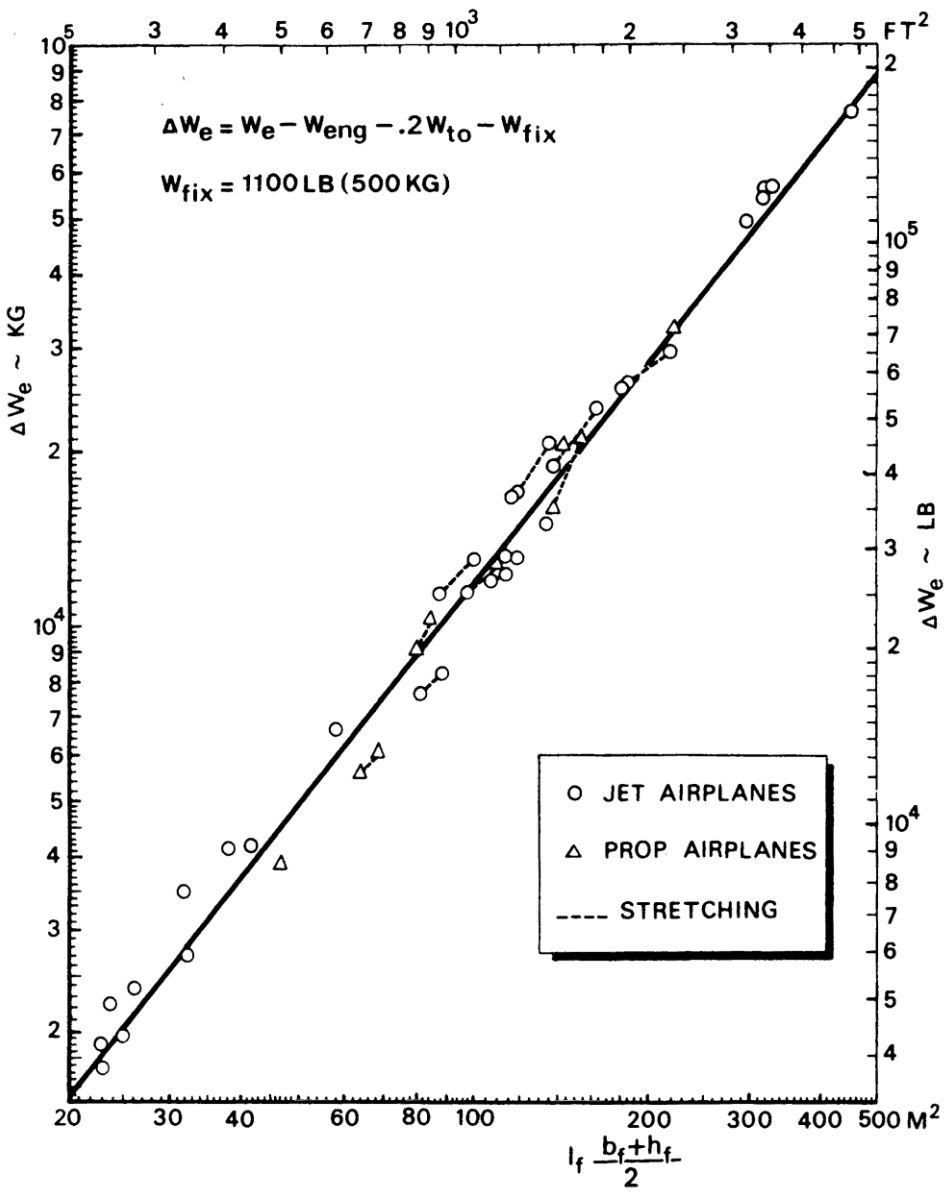

Figure 6.4: Empty weight of jet transport and executive airplane

7-Engine Selection & Take-off Distance Estimation

7.1. Introduction:

The choice of engine lies between turbo-props, turbo-jets and turbo-fans engines. Piston engines are convenient for small, low altitude, low speed a/c, but it still important.

Turbo-jets are generally inefficient at low altitude and also noisy. Turbo-props are generally inefficient at high altitude, besides propellers can be dangerous on ground. Also slipstream from an idealing propeller can be uncomfortable and nuisance. Turbo-fans are the best choice in many respects.

The sizing of propulsion unit depends on the amount of thrust required during takeoff stage. The maximum thrust needed is called static thrust (T_o) where take-off velocity is zero ($V_{to} = 0$), i.e. at the beginning of takeoff stage. Take-off thrust affects the acceleration during this stage and the length of runway.

7.2. Take off stage distance:

Total take-off distance may sub divided into two main stages, see figure (7-1):-

a) Take-off ground roll, which is subdivided into
- Ground distance, S_G.
- Rotation distance, S_R.

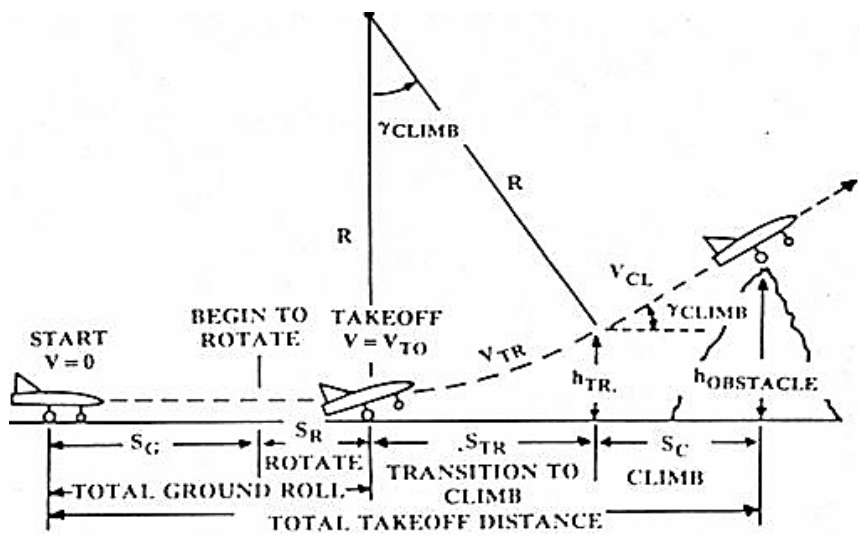

Figure 7.1a: Takeoff distance definitions

- $\boldsymbol{S_G}$, Ground or (Nose-wheel on ground) distance, in m, is computed from system of forces, in $x - direction$, see figure 7.2:

$$ma_x = \frac{W}{g}a = T - D - \mu(W - L)$$

$$= (T - \mu W) + (\mu L - D) \ldots 7.1$$

$$\frac{a_x}{g} = \left(\frac{T}{W} - \mu\right) + \frac{\rho}{2W/S}(\mu C_{L-}C_{Do} - KC_L^2)V^2$$

$$v = \frac{ds}{dt} \quad ; \quad a = \frac{dv}{dt}$$

$$ds = \frac{vdv}{a} = \frac{1}{2g}\frac{dv^2}{a/g}$$

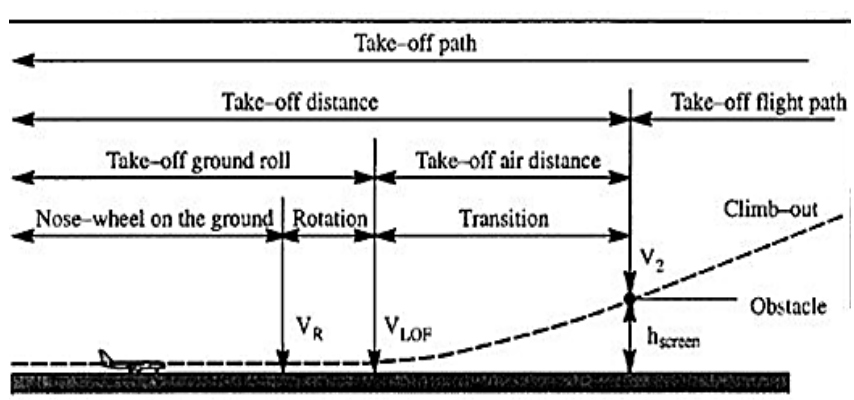

Figure 7.1b: Takeoff distance definitions

$$s = \frac{1}{2g}\int_i^j \frac{dv^2}{a/g}$$

$$S_G = \frac{1}{2g}\int_i^j \frac{dV^2}{K_T + K_A V^2}$$

$$S_G = \frac{1}{2gK_A}\, ln\left(\frac{K_T + K_A V_j^2}{K_T + K_A V_i^2}\right) \qquad \ldots 7.2$$

$$K_T = \frac{T}{W} - \mu_{roll} \qquad \ldots 7.2a$$

$$K_A = \frac{\rho}{2(W/S)}(\mu C_L - C_{Do} - KC_L^2) \quad \ldots 7.2b$$

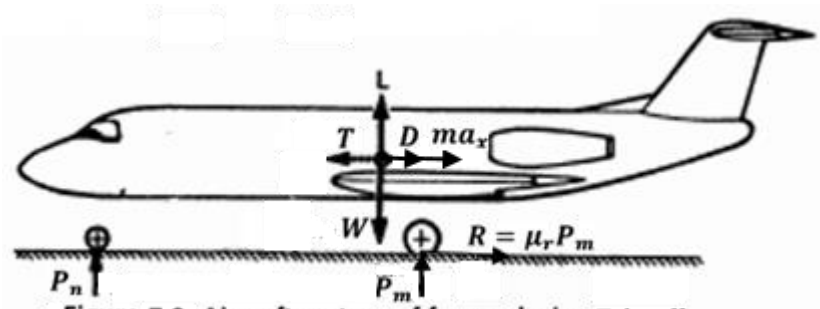

Figure 7.2: Aircraft system of forces during Takeoff

where $v_i = 0$ is the initial velocity and $v_j = v_{t.o.}$ is the final velocity. Thrust decreases with increasing velocity during takeoff stage, so average value of thrust should be considered see figure (7.3a).

According to Roskam; $C_{L,T.O} = C_{L,max,T.o}/1.21$

According to Raymer; $C_{L,T.O} = 0.9C_{L,max,T.o}$

For good approximation, the ground distance is:

$$S_{GR} = \frac{1}{2gA} v_{t.o.}^2 \qquad A = \frac{\bar{T}}{W} - \acute{\mu} \qquad \ldots 7.3$$

$$\acute{\mu} = \mu_{roll} + 0.72\, C_{Do}/C_{L,max}$$

$\mu_{roll} = 0.02 - 0.03$ Dry concrete and asphalt.

$= 0.05$ Wet concrete and asphalt and hard turf and short grass.

$= 0.1$ Long grass.

$= 0.1 - 0.3$ Soft ground.

$\bar{T}/W$ is the mean thrust-to-weight ratio taken at a mean takeoff speed. $\bar{T}$ is mean thrust at mean velocity v_{mean}. Graph (7.3) may use to evaluate ($\bar{T}$) and v_{mean}. Or $v_{mean} = v_{t.o.}/\sqrt{2}$, $v_{t.o} = 1.2v_s$.

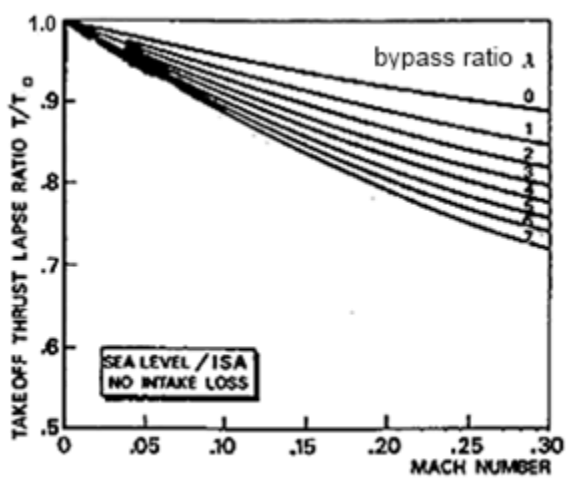

Figure 7.3a: Statistical curves of thrust lapse during take off

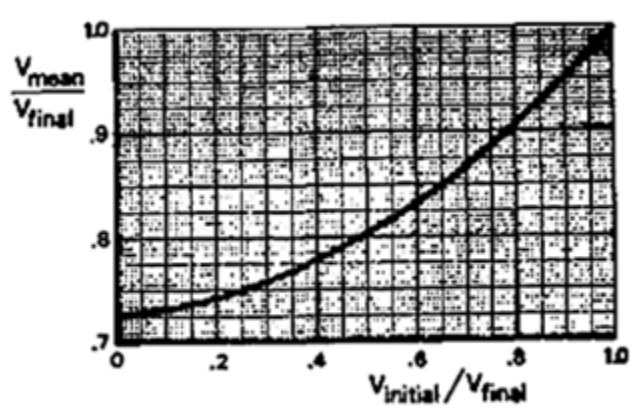

Figure 7.3b: mean velocity calculation during take off

The mean thrust for jet aircraft can be approximated as:

$$\bar{T} = 0.75\left(\frac{5+\lambda}{4+\lambda}\right)T_{to}$$

(λ) is turbofan by pass ratio. Take ($T_o/W = 0.35$) and $C_{Do} = 0.10 \div 0.18$ where flaps and u.c. are extended down.

The mean thrust for propeller aircraft with variable pitch propellers can be approximated as:

$$\bar{T} = 5.75\left(\frac{\sigma N D_p^2}{P_{to}}\right)^{1/3} P_{to}$$

The mean thrust for propeller aircraft with fixed pitch propellers can be approximated as:

$$\bar{T} = 4.60\left(\frac{\sigma N D_p^2}{P_{to}}\right)^{1/3} P_{to}$$

$\left(P_{to}/ND_p^2\right)$ is the static disk loading at takeoff. For turboprops its value (10-30), for singles and light twins (3-10).

- $\boldsymbol{S_R}$, Rotation distance, in m,($v_R = 1.15\ v_{stall}$):-

$S_R = 1.0 * v_R$ ...7.4a For light a/c, it takes one second to rotate nose up.

$= 3.0 * v_R$ ...7.4b For large a/c, it takes three seconds to rotate nose up.

b) Take-off air distance, $\boldsymbol{S_A}$: - ($\boldsymbol{S_A} = \boldsymbol{S_{TR}} + \boldsymbol{S_{CL}}$); It is the distance needed to climb from ground level to an obstacle height,$h_{obstacle}$, of ($35\ ft$) for commercial a/c or ($50\ ft$) for military and small civilian a/c. it consists of:

- $\boldsymbol{S_{TR}}$, Transition distance, in m, ($v_{TR} = (1.15 - 1.20)\ v_{stall}$). It depends on the radius of rotation. From figure 7.4:

$$sin\gamma_{climb} = \frac{T-D}{W} = \frac{T}{W} - \frac{1}{L/D} \qquad ...7.6$$

$$S_{TR} = R\ sin\ \gamma_{climb} \qquad ...7.8$$

From figure (7.5), ($L/D = C_{L,T.O}/C_D = 5 - 10$) at takeoff.

The load factor, n, is defined as:

$$n = \frac{L}{W}$$

$$= \frac{0.5\ \rho S\left(0.9C_{L,max}\right) * (1.15V_{stall})^2}{0.5\ \rho S C_{L,max} V_{stall}^2} = 1.2 \qquad ...7.9$$

And for climbing maneuver, the lift force equals the centrifugal force and the weight component. Then:

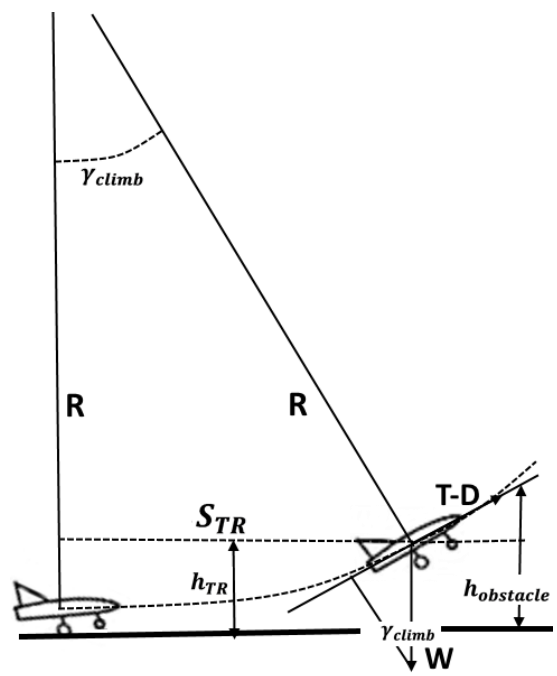

Figure 7.4: Transition and climb stages

$$L = m\frac{V^2}{R} + W\cos\gamma$$

For maximum load $\cos\gamma = 1$, then:

$$n = \frac{L}{W} = 1.0 + \frac{V_{TR}^2}{Rg} = 1.2 \qquad \ldots 7.10$$

$$R = \frac{V_{TR}^2}{g(n-1)} = \frac{V_{TR}^2}{0.2g} \approx 0.205\, V_{stall}^2 \qquad \ldots 7.11$$

$$h_{TR} = R(1 - cos\gamma_{climb}) \qquad \ldots 7.12$$

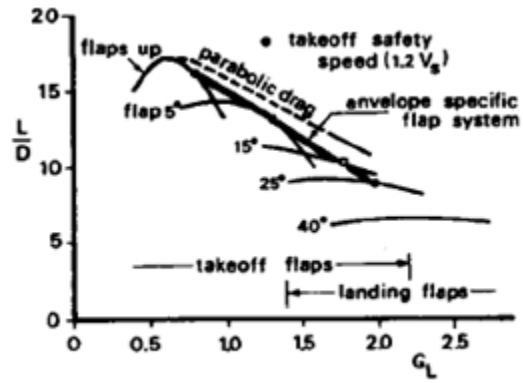

Figure 7.5: Typical lift/drag ratios

If the obstacle height for transition stage h_{TR} is cleared before the end of the transition segment, then:

$$S_{TR} = \sqrt{R^2 - (R - h_{TR})^2} \qquad \ldots 7.13$$

$\boldsymbol{S_{CL}}$, Climb distance, in m, ($v_{CL} = 1.2\, v_{stall}$).

$$S_{CL} = \frac{h_{obstacle} - h_{TR}}{\tan\gamma_{climb}} \qquad \ldots 7.14$$

If the obstacle height $h_{obstacle}$ is cleared during transition stage then:

$$S_{CL} = 0.0 \qquad \ldots 7.15$$

7.3. Determination of static thrust or take-off distance according to FAR 23& FAR 25:

The following formulas are very useful to find static thrust or static power at take off stage provided that the takeoff distance length is already prescribed. Note that if the thrust is assumed then the takeoff distance is predicted and vice versa.

FAR 23 give a statistical method for predication the take-off distance of a propeller driven airplanes, which is:

$$S_{TO} = 1.66\, S_G \qquad \ldots 7.16$$

$$S_G = 4.9(TOP_{23}) + 0.009(TOP_{23})^2 \qquad \ldots 7.17$$

$$(TOP_{23}) = \frac{(W/S)_{TO}(W/P)_{TO}}{\sigma C_{L,max,TO}} \qquad \ldots 7.18$$

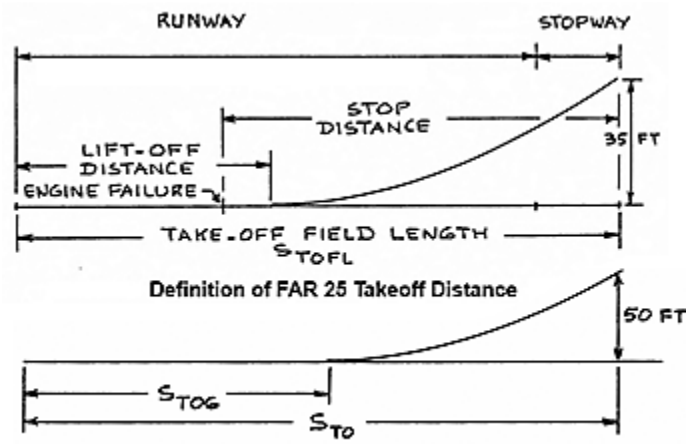

FAR 25 give a statistical method for predication the take-off distance of a jet driven airplanes, which is:

$$S_{TOFL} = 37.5\,(TOP)_{25} \qquad \ldots 7.19$$

$$(TOP)_{25} = \frac{(W/S)_{TO}(W/T)_{TO}}{\sigma C_{L,max,TO}} \qquad \ldots 7.20$$

(TOP) is called takeoff parameter, S_{To} is take off distance, $(W\ /\ S)$ wing loading in (lbs/ft^2), $(W\ /\ T)$ is dimensionless, W is aircraft maximum takeoff weight in lbs, and P is engine power in

$horsepower$. One kilogram force ($1\ kgs = 2.204623\ lbs$), ($1\ m = 3.28083\ ft$) and ($1\ kW = 1.341022\ hp$) (hp).

FAR 25 certified airplanes can be both jet-driven and propeller-driven (prop-fans or turboprops). In the case of propeller-driven airplanes it is necessary to convert the value of (T/W) required in take-off to the corresponding value of (W/p). Use figure (7-6) for this purpose depending on the assumed propeller characteristics.

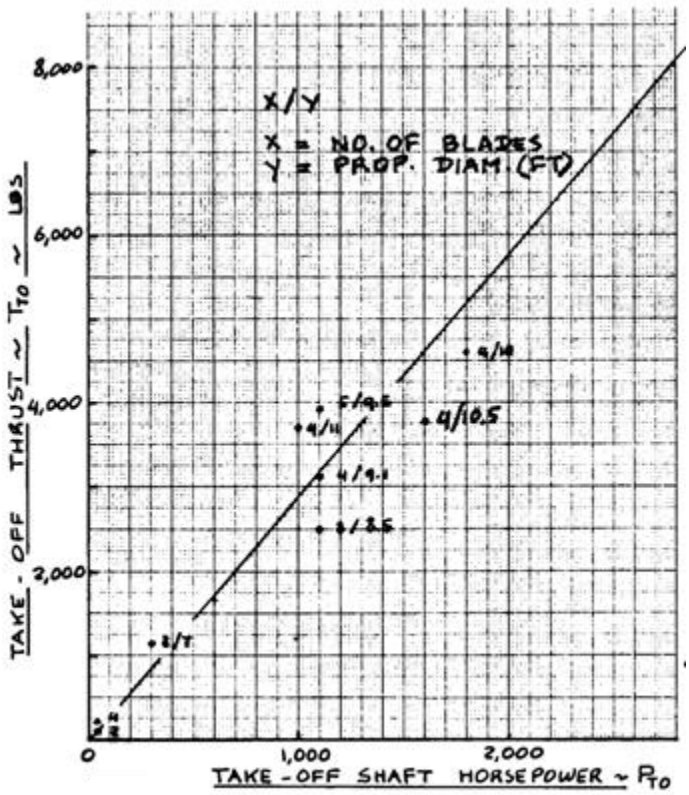

Figure 7.6: conversion of shafthorse power into thrust

7.4. Graphical method for determine static thrust or takeoff distance:-

If the takeoff distance is known figure (7-7) can be used to evaluate thrust at take-off (T_o). Calculate thrust according to FAR 25 from the value;

$(W/S)(W\ /\ T)\left(1/C_{Lmax,TO}\right)(1/\sigma)$ at ground run. Calculate break horse power according to FAR 23 from the value;

$(W/S)(W\ /\ BHP)\left(1/C_{Lmax,TO}\right)(1/\sigma)$. Where ($\sigma$) is relative density.

7.5. Rapid method for evaluation of static thrust:-

A rapid method depends on thrust/weight ratio which is used to estimate required thrust roughly. This ratio is take at sea level, standard day condition at design take-off weight and maximum throttle setting where $v_{t.o.} = 0.0$.

$$T_{t.o.} = \frac{T_o}{W} \times W \qquad \ldots 7.21$$

$\frac{T}{W} = 0.4$ Jet trainer.

$= 0.9 - 1.1$ Jet fighter (dog fighter).

$= 0.6$ Jet fighter (others).

$= 0.25$ $Military\ cargo//bomber$

$= 0.25 \div 0.35$ $Jet\ transporter$

As the required static thrust at take-off is evaluated, a suitable engine (two or more) is chosen to account for static thrust plus 10% as a save margin. See table 7.1.

Once the engine is selected, all useful specifications about weight, sizing and cost are become available. The following relations, due to Raymer, may use if there is no sufficient data.

Non-afterburning jet engine for subsonic commercial transports, for bypass ratios 1 to 6.

$W = 0.08\, T^{1.1}\, e^{-0.045B}$

$L = 2.22\, T^{0.4}\, M^{0.2}$

$D = 0.393\, T^{0.5}\, e^{0.04B}$

$sfc_{\max T} = 0.67\, e^{-0.12B}$

$T_{cruise} = 0.60\, T^{0.9}\, e^{0.02B}$

$sfc_{cruise} = 0.88\, e^{-0.05B}$

Afterburning jet engines for Supersonic fighters and bombers ($M < 2.5$).

$W = 0.063\, T^{1.1}\, M^{0.25}\, e^{-0.081B}$

$L = 3.06\, T^{0.4}\, M^{0.2}$

$D = 0.288\, T^{0.5}\, e^{0.04B}$

$sfc_{\max T} = 2.1\, e^{-0.12B}$

$T_{cruise} = 1.60\, T^{0.74}\, e^{0.023B}$

$sfc_{cruise} = 1.04\, e^{-0.186B}$

$W: Weight.$ lb

$L: Engine\ length.$ in

$D: Engine\ diameter$ in

$T: Takeoff\ thrust$ in

$specific\ fuel\ consumption\ lb/lb\ /hr$

$B: bypass\ ratio.$

$M: Mach\ number.$

Cruise condition is taken at altitude of $36000\ ft$ at $0.9M$

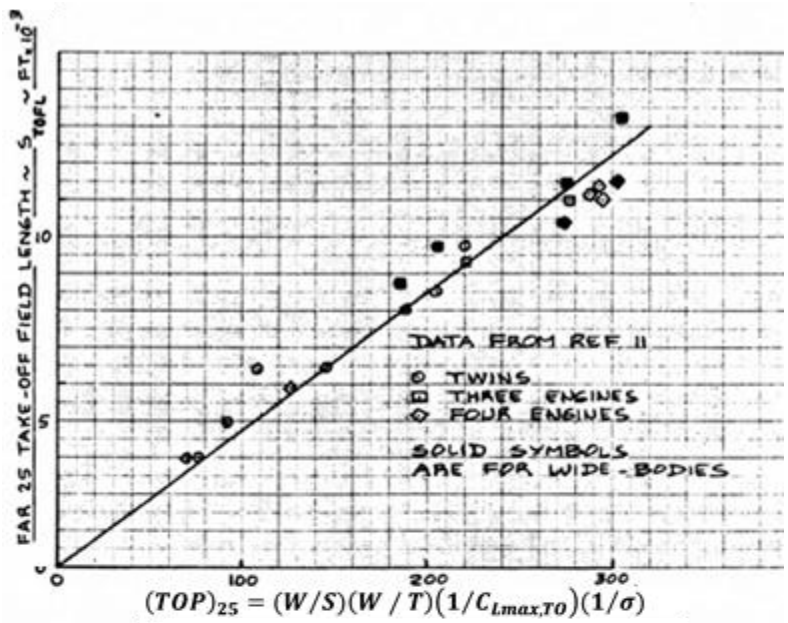

Figure 7.7a: Takeoff distance according toFAR 25 for turbojet aircraft

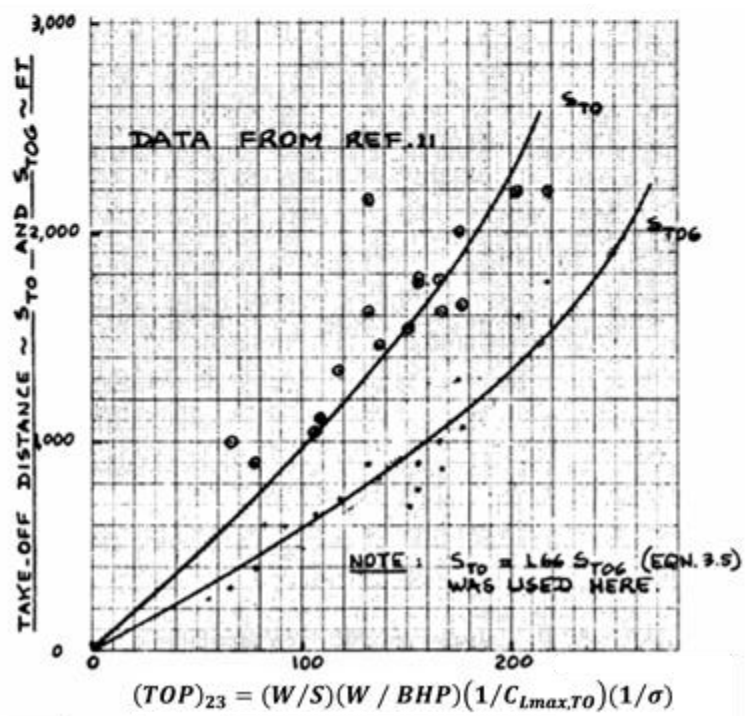

Figure 7.7b: Takeoff distance according to FAR 23 for propeller aircraft

7.6. Calculation of minimum thrust required:-

To calculate the minimum thrust required to takeoff from specified takeoff distance, figure (7.8), the kinetic energy for the a/c during take-off is:-

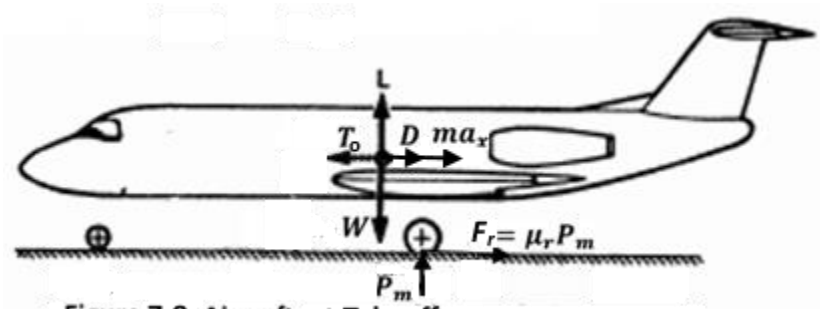

Figure 7.8: Aircraft at Takeoff

$$\frac{1}{2}\frac{W}{g}v_{av}^2 = (T_o - R) \times S_{TG} \qquad \ldots 7.22$$

$$T_o = R + \frac{W}{g}\frac{v_{av}^2}{2\,S_{TG}} \qquad \ldots 7.23$$

$$R = D + F_r = D + \mu_r(W - L) \qquad \ldots 7.24$$

$$R = q_{av}\,S_w\,C_{Do} + q_{av}\,S_w\,\frac{1}{\pi.AR.e} + \mu_r W - \mu_r\,q_{av}\,S_w\,C_{L,t.o} \qquad \ldots 7.25$$

$$D = \frac{1}{2}\rho\,v_{av}^2\,S_w\,C_{D,t.o} = q\,S_w\,C_{D,t.o} \qquad \ldots 7.26$$

$$C_{D,t.o} = C_{Do} + KC_{L,t.o}^2 = C_{Do} + \frac{C_{L,t.o}^2}{\pi.AR.e} \qquad \ldots 7.27$$

For minimum required static thrust, the resistant force, R, should be minimum. And. To evaluate the value of ($C_{L,t.o}$) for minimum resistance force, equation (7-27) is differentiating with respect to (C_L).

$$\frac{dR}{dC_L} = q_{av}\,S_w\,\frac{2C_{L,m.Re}}{\pi.AR.e} - \mu_r\,q_{av}\,S_w \qquad \ldots 7.28$$

$$\therefore\ C_{L,m.Re} = \frac{\pi.AR.e.\mu_r}{2} = \frac{\pi.AR.\mu_r}{2k} \qquad \ldots 7.29$$

From eq. (7.25)

$$R_{min.th} = \mu_r W + q_{av}\,S_w\left[C_{Do} + \frac{k}{\pi.AR}\left(\frac{\pi.AR.\mu_r}{2k}\right)^2 - \mu_r\,\frac{\pi.AR.\mu_r}{2k}\right] \qquad \ldots 7.30$$

Substitute equation (7-29) into equation (7-30) gives:-

$$R_{min.th} = \mu_r W + q_{av}\,S_w\left[C_{Do} - \mu_r\,\frac{\pi.AR.\mu_r^2}{4k}\right] \qquad \ldots 7.31$$

Substitute Equations (7-31) into (7-23), and the resultant equation is used to evaluate minimum thrust required at take-off (T_{mini})

$$T_{mini,R} = R_{min} + \frac{W}{g}\frac{v_{av}^2}{2\,S_{TG}} \qquad \ldots 7.32$$

Where (AR) is aspect ratio and ($k = 1/e$), (e) is called Oswald span efficiency factor, ($e = 0.7 \div 0.85$), or:

$e = 1.78(1.0 - 0.045\,AR^{0.68}) - 0.64$ for straight wing where ($\Lambda < 30°$)

$e = 4.61(1.0 - 0.045\,AR^{0.68})(\cos\Lambda)^{0.15} - 3.1$ for straight wing where ($\Lambda > 30°$)

At take-off ($C_{Do} \approx 0.10 \div 0.18$), to account for flap deflection and u.c. extended. (q_{av}) is the average value from zero to take-off velocity.

Typical polars for several flap deflections for takeoff and landing are shown in fig. (7.9). For example at $C_{Lmax,t.o} = 2.2$ and $\delta_{flap} = 45^o$ the drag coefficient, $C_{D,to} = 0.30$ which is very large drag value. But at landing where $\delta_{flap} = 60^o$, $C_{D,L} \approx 0.34$ for the same lift coefficient.

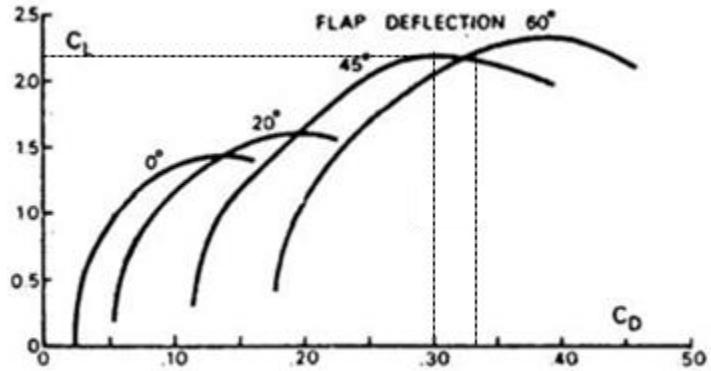

Figure 7.9: Low speed polars for light transporter

7.7. Steps of solutions for the project:-

1. Assume static thrust $T_o = (0.25 \div 0.35)MTOW$ and airfield runway of $1000\ m$.
2. Calculate takeoff distance, in details, mathematically, according to FAR 25 and FAR 23 and graphically.
3. If the require airfield length less than $1000\ m$ that is good. If the calculated airfield larger than$1000\ m$, recalculated the required static thrust to maintain airfield length of $1000\ m$..
4. Calculate takeoff thrust and airfield length for minimum resistance force in details. And comment on your results.
5. Choose 2 engines from engines market (catalogues) of the same type that their thrust equal the static thrust plus say 20% .
6. Extract engine data, dimensions, photo, characteristics …etc.

Example: An aircraft has a takeoff speed of $120\ km/h$ is taking off an airfield of length $240\ m$. For constant acceleration find; (a) acceleration value and (b) Time to takeoff.

Solution:

$$v = \frac{ds}{dt} \quad ; \quad a = \frac{dv}{dt} \quad ; \quad ds = \frac{vdv}{a} = \frac{v^2}{2a}$$

$$s = \frac{1}{2a}\left(v_f^2 - v_i^2\right)$$

$v_i = 0$, the initial velocity.

$$v_f = 120/3.6 = 33.333\ m/s$$

$$a = \frac{1}{2 * 240}(33.333^{\ 2} - 0) = 2.315\ m/s^2$$

$$dt = \frac{dv}{a}$$

$$\Delta t = \frac{v_f - v_i}{a} = \frac{33.333}{2.315} = 14.399\ s$$

Engine Manufacturer	Engine Type	Net Thrust kg		Cruise SFC	Bypass ratio	Air flow SL/ISA static T.O. kg/sec	Pressure ratio		Turbine Entry Temp. SL/ISA T.O. K
		Takeoff SL/ISA static	Cruise 11,000 m M = .80	kg/kg/h	SL/ISA static		total	fan	
Turboméca	Arbizon III	400	133	1.14	0	6	5.5	-	
Turboméca	Astafan II	710 Dry	230*	.63*	6.5	31	9	1.32	
Pratt & Whitney Can.	JT-15D-1	1000	223	.88	3.2	35.4	10.2	1.52	1235
Pratt & Whitney	JT-12A-6	1360	363	1.06	0	22	6.5	-	
Ivchenko	AI-25	1500	443*	.84*	2	42	9	1.7	
Rolls-Royce (BS)	Viper 20-F.20	1545	467	1.26	0	20	5.6	-	1135
Garret-Airesearch	TFE 731-1	1585	408	.83	2.7	51.3	19		1285
General Electric	CF-700 2B	1950	428	.93	1.9	38	6.8		
Avco Lycoming	502 D	2800	609	.78	6.1	108	10.3	1.39	1285
Rolls-Royce (BS)	M-45H-01	3520	1245*	.73*	2.8	104	18		1330
Rolls-Royce	Spey Mk555-15	4470	1680*	.79*	1	91	16		990
Rolls-Royce	Trent RB 203.08	4530	1315*	.72*	3	136	16		
Rolls-Royce	Avon Mk524B	4760			0	83	8.7		1100
Rolls-Royce	Spey Mk511-5	5170	1975*	.79*	.64	92	19		1350
Soloviev	D-20P	5400	1100	.78*	1	113	14	2.6	
Pratt & Whitney	JT-3C-7	5440	1540	.90	0	91	13		
Pratt & Whitney	JT-8D-7	6350	1540	.81	1.1	141	15.8		
General Electric	CJ-805-21	6800	≈1300	.76	1.5	188	12*	1.6	
Soloviev	D-30P	6800	1300*	.77	1	125	18.6		1300
Rolls-Royce	Conway RCo. 12	7940	2075	.89	.3	127	15.1		1315
Pratt & Whitney	JT-4A-11	7940	2130	.92	0	115	12		
Pratt & Whitney	JT-3D-3	8170			1.4	204	13		
Pratt & Whitney	JT-3D-5A	9520					16		
Rolls-Royce	Conway RCo.42-3	9900	2420	.82	0.6	165	15.1		
S.N.E.C.M.A.	M-56-20	10000	2320	.67	4.0	323	18	1.55	1480
S.N.E.C.M.A.	M-56-40	10000	2205	.64	4.8	334	25	1.55	1520
Kuznetsov	NK-8-4	10500	2750	.78	1	232	23.2	2.15	1145
Soloviev	D-30K	11500	2750	.67	2.3	272	20	2	
Rolls-Royce	RB.211-22	19050	4020	.61	4.8	602	25	1.5	1420*
General Electric	CF-6-6G	19500		.64	5.6	655	29		1570*
Pratt & Whitney	JT-9-D-15	20500	4350	.62	4.4	687	22		1425

Table (7-1a): Principles characteristics of turbo engines

Internal intake diam. cm	Length m	Dry weight kg	Engine assembly: No. Spools	Number of stages: Fan	Compressor	Turbine	Comb. Chamber	Turbine Cooling	Date first run	Remarks
-	1.51	115	1	0	1LA-1HC	1	ann.	no	1970	
56	1.90	195	1	1	2LA-1HC	3	ann.	air	1969	* 6000m/600 km/h,geared
55.3	1.51	229	2	1	1HC	1H-2L	ann.rev.	no	1967	
45.7	1.60	203	1	0	4LA-4HA	2	8 can.	no	1958	
56	1.99	290	2	→	3LA-8HA	1H-2L	ann.		1966	
47	2.16	270	1	0	7	1	ann.	no	1965	
71.6	1.26	272	2	1	4LA-1HC	1H-3L	ann.		1969	geared
91.3	1.91	334	2	1	8A	2			1962	aft fan
102.4	1.62	526	2	1	7LA-1HC	2H-2L	ann.	air	1970	geared
90.9	2.96	673	2	1	5LA-7HA	1H-3L	ann.	.	1968	* 6,100m/M=.65
82.4	2.79	990	2	→	4LA-12HA	2H-2L	can.	air	1965	* 7,620m/M=.70
98.3	2.09	805	3	1	4MA-5HA	1H-1M-1L	ann.	air	1967	* 7,620m/M=.70
99.1	3.20*	1516	1	0	16	8	8 can.	no	1957	* with nozzle
82.4	2.91	1050	2	→	5LA-12HA	2H-2L	10 can.	air	1960	* 7, 20 m/M=.70
93	3.30	1470	2	→	3LA-8HA	1H-2L	12 can.		1960	* 10,000 m/M=.82
98.8	4.25*	1585	2		9LA-7HA	1H-2L	8 can.	no	1957	* overall
108	3.75	1431	2	2	4LA-7HA	1H-3L	9 can.	air	1961	
81.3	3.66	1680	2		17	3	10 can.		1960	* Excl. aft fan
98.5	3.93	1520	2	→	4LA-10HA	2H-2L	12 can.		1965	* M=.75
95.5	3.34	2060	2	4	7LA-9HA	1H-2L	10 can.	air	1957	Mk 509
103.5	3.66	2310	2	0	8LA-7HA	1H-2L	8 can.	no	1956	
135	3.71	1890	2	2	6LA-7HA	1H-3L	8 can.	no	1958	
135		2073	2		as above+1st.	1H-3L	8 can.	no		
114.2	3.90	2310	2	4	7LA-9HA	1H-2L	10 can.	air	1960	
157.5	2.90	1940	2	1	6LA-6HA	1H-4L	ann.	air	proj.	400m/sec fan tip speed
162.8	3.36	2120	3	1	6MA-8HA	2H-1M-4L	ann.	air	proj.	310m/sec fan tip speed
144.2	5.10	2200	2	2	2LA-6HA	1H-2L		air		
145.5	4.61	2150	2	→	3LA-11HA	2H-4L	12 can.			
217.2	3.03	3267	3	1	7MA-6HA	1H-1M-3L	ann.	imping.	1968	* 1485 K hot day
219	4.90	3540	2	1	1LA-16HA	2H-5L	ann.	air	1968	* 1595 K hot day
237	3.26	3970	2	1	3LA-11HA	2H-4L	ann.	air	1966	

Table (7-1a): continue

Engine Manufacturer	Engine Type	Performance, ISA: Power Takeoff SL/static	Power Cruise 20,000ft 245kts	ESFC cruise kgf/pk/h	Engine cycle: Air-flow kg/s	OPR	TET (K)	Propeller: Max. RPM	Gear ratio	RPM	Dimensions: length m	width/diam. m	Dry weight kg	Engine-assembly: No. spools	Number of stages: Compressor	Turbine	Comb. Chamb.	Date first run	Remarks
Rover	Model TP-90	110	49	.609	.85	2.8	-	47,000	.0540	2538A	.90	.52	91	1	1C	1	1 can	1960	NS
Allison	Model 250(T-63)	250	149	.295	1.35	6	1170	48,950	-	- C	.95	.40	62	2	6LA-1HC	2H-2LF	ann.	1959	turboshaft
Turboméca	Orédon III	E 350	190	.242	1.35	7.5		59,100	.1024	-	1.09	.37	82	1	2LA-1HC	3	ann.	1964	turboshaft
Turboméca	Astazou II	E 555	307	.361	2.50	5.7		43,500	.0558	2425C	1.91*	.66	122	1	1LA-1HC	3	ann.	1960	*incl. prop.
Pratt & Whitney	PT 6A-6	E 578	332	.279	2.25	5.7		33,000	.0663	2200C	1.58	.48	122	2	3LA-1HC	1H-1LF	ann.	1963	turboshaft
Turboméca	Astazou XIV A	E 600	321	.251	2.50	7.5		43,000	.0415	1783C	1.43	.68	160	1	2LA-1HC	3	ann.	1966	R
Turboméca	Bastan IV	E 935	552	.251	4.50	5.8	1143	33,500			1.55	.75	222	1	1LA-1HC	3	ann.	1959	*15,000 ft
AVCO Lycoming	T-53-L-7	E 1150	730*	.261*	5.00	6.0		25,240		1700	1.49	.58	245	2	5LA-1HC	2H+2LF	ann.	1959	aircooled
AiResearch	TPE 331-20	600	355	.255	2.50	7.82	1240	41,730	.0479	2000C	1.18	.55	129	1	2C	3	ann.	1963	β-control
General Electric	T-58-GE-8	1250	780	.247	5.62	8.30	1150	19,500		2000C	1.39	.41	130	2	10A	2H+1LF	can	1959	turboshaft
AVCO Lycoming	T-5313A	1400	800	.240	5.50	7.40	1210	25,240		1680C	1.48	.58	274	2	5LA-1HC	2H+2LF	ann.	1967	R
AVCO Lycoming	T-5313B	1400	800	.240	5.50		1210			1680C	1.48	.58	312	2	5LA-1HC	2H+2LF	ann.	1967	R
Rolls-Royce	Dart Mk511-7E	E 1740	930	.308	9.30	5.50	1130	14,500	.086		2.43	.96	494	1	1LC-1HC	2	7can	1953	
AVCO Lycoming	T-5321A	1800	920	.229	5.80		1325	21,300		C			306	2	5LA-1HC	2H+2LF	ann.	1969	aircooled, R
Rolls-Royce	Dart Mk528	E 2105	1170	.266	10.70	5.75	1160	15,000	.0929		2.50	.96	560	1	1LC-1HC	3	7can	1956	
			30,000ft	300 kts															
General Electric	T-64-GE-6	2650	1350	.200	11.10	12.60	1200	13,640			2.80	.74	490	2	14A	2H+2LF	ann.	1959	
Napier	Eland N.El. 1	3000	1230	.229	14.10	7.00		12,500	.0714	893A	3.10	.92	715	1	10A	3	6can	1952	
Rolls-Royce	Dart Mk542-10	E 3025			12.25	6.35	1225	15,000	.0775		2.53	.96	625	1	1LC-1HC	3	7can	1960	
Allison	501-D-13	E 3750	1450	.213	14.75	9.25	1249	13,820		A	3.69	.69	797	1	14A	4	6can	1954	
Allison	T-56-A-10W	4050	1450	.215	14.65	9.25	1249			1021C	3.71	.69	838	1	14A	4	6can	1953	
Bristol Siddeley	Proteus Mk765	E 4400	2155	.224	20.90	7.10	1150		.0863		3.13	1.10	1315	2	12LA-1HC	2H-2L	8can	1958	
Rolls-Royce	Tyne R.Ty.12	E 5505	2400	.185	21.20	13.50	1242	15,250	.064	976A	2.77	1.03	1000	2	6LA-9HA	.1H-3L	10can	1959	
Rolls-Royce	Tyne R.Ty.20	E 6100	2500	.193	21.20	13.50	1273	15,250	.064	976A	2.76	1.40	1085	2	6LA-9HA	1H-3L	10can	1962	aircooled

Table (7-1b): Principles characteristics of turbo-prop engines

8-Airplane Center of Gravity, Load and Balancing Diagram

8.1. Airplane center of gravity

Center of gravity is the point at which a/c would balance if suspended. Variation (movement) in the (c.g.) position has an effect on:

1. Stability and control characteristics.
2. Tail maneuver loads.
3. Ground loads acts on the nose u/c.

Center of gravity is the extreme locations of the (c.g.) within which the a/c must be operated for a given weight. Acceptable (c.g.) limit must be established taking into account:

1. Fore and aft position of the wing relative to the fuselage.
2. Provision of suitable locations for payload and fuel.
3. Design of the horizontal tail plane, the elevator and the longitudinal flight control system.
4. Location of u/c.

The (c.g.) limit must be established in three directions but the most important are longitudinal and lateral directions. Suitable system of coordinate axes should be chosen. The weight and position of (c.g.) for each part in the a/c must be defined. The data must be tabulated in a table similar to table (8.1). Table (8.2) gives typical c.g. position for a/c main different parts. Table (8.3) gives a typical c.g. limit for different type of a/c. The position of c.g. is simply calculated with reference to a/c nose (capital letter), then:

$$X_{c.g} = \frac{\sum X_i W_i}{W_i} \quad , \quad Y_{c.g} = \frac{\sum Y_i W_i}{W_i} \qquad \text{... 8.1}$$

$W_i = weight\ of\ each\ item$

$X_i =$ longitudinal distance from each item c.g. to aircraft nose. It represent moment arm.

$Y_i =$ latral distance from each item c.g. to aircraft symmetry plane. It represent moment arm.

8.2. Load and Balance Diagram.

8.2.1. (Loading Loop).

Loading means how you are positioning different unfixed loads and passengers. Balancing diagram or loading loop is a diagram showing the relation between a/c different weights and the position of (c.g.) as a percentage of mean aerodynamic chord(AMC).

As an example the loading loop for a short range passenger transporter, with a cabin of 4-sets a breast with one aisle is shown in figure (8.1).

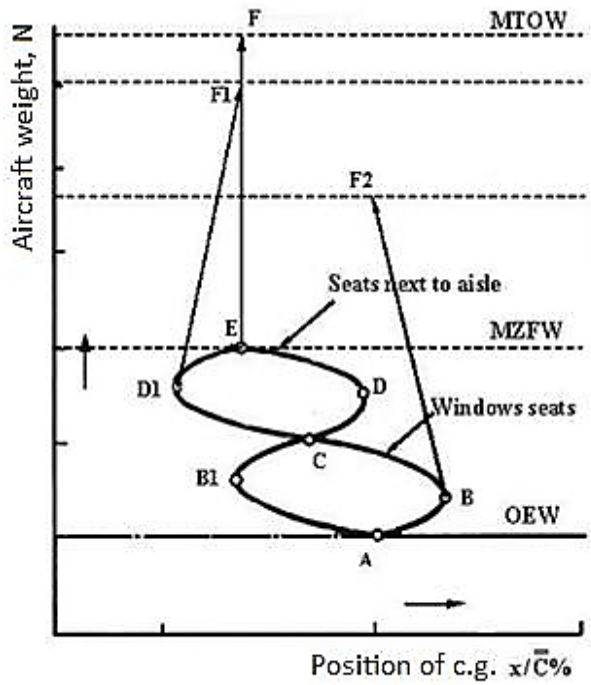

Figure 8.1: Typica loading loop

A : c.g. position at OEW.

B : Maximum aft position of c.g.

$D1$: Maximum forward position of c.g.

$D1B$: c.g. position limit.

$BF2$: c.g. position improvement due to addition of fuel weight at B.

$FF1$: c.g. position improvement due to addition of fuel weight at F.

EF : c.g. position improvement due to addition of fuel weight at E.

8.2.2. Window Seating Rule.

In order to find passengers loading loop, passengers are set in a define rule called "widow seating rule".

ABC : Seats nearest to the window are occupied starting from cabin rear side to front side.

CDE : Seats nearest to aisle are occupied starting from cabin rear side to front side.

$AB1C$: Seats nearest to the window are occupied starting from cabin front side to rear side.

$CD1E$: Seats nearest to the aisle are occupied starting from cabin front side to rear side.

After computing (X_{OEW}) from equation (1), for main aircraft items, passengers and fuel weight are added and c.g. is recalculated by eq. 8.1. The weight of each two passengers is added according to window seating rule where their c.g. position is known (it is arranged by the designer himself). The weight of each passenger is 75 kg plus 20 kg of baggage. Then fuel weight is added where fuel tank c.g. is assumed exactly as wing c.g. position (see table 8.2), and loading loop is drawn.

(X_{OEW}) with capital letter is with a reference to a/c nose while (x_{OEW}) with small letter is with a reference to the leading edge of mean aerodynamic chord, $LEMAC$. To transfer capital letter distance, X_{item} into small letter distance, x_{item}:

$$x_{item} = X_{item} - X_{LEMAC} \qquad \text{... 8.2}$$

Where X_{LEMAC} is the distance from mean aerodynamic chord leading edge to a/c nose.

8.3. How to maintain $x_{c.g,OEW}$ Location.

Firstly the position of a/c c.g. must be arranged to coincide with the a.c., i.e. $x_{c.g,OEW} = 0.25\,\bar{\bar{C}}$. The location of a/c center of gravity for different loading cases should lies within($x_{c.g} = 10\%\ to\ 50\%)\bar{\bar{C}}$, see table 8.3. If it is not, there are many ways for the designer to make the c.g. limit within the specification. The c.g. limit should never exceed mean aerodynamic chord location.

1. For empty weight, the longitudinal location of the wing is rearranged to ensure that ($x_{OEW} = 0.25\%\ \bar{\bar{C}}$) which is point A.
2. Rearrange cabin layout, engine location, cargo compartments, fuel tanks, systems, etc.
3. Suitable tail plane and control system design. And u/c position should provide an acceptable fore and aft c.g. limit.

8.4. How to make ($x_{OEW} \approx 0.25\bar{\bar{C}}$).

A simple procedure to insure that ($x_{OEW} \approx 0.25\bar{\bar{C}}$) is described below:

1. Subdivided the a/c into two main groups:
   a) The fuselage group, containing parts whose location is fixed relative to the fuselage such as.
   - Fully furnished and equipped fuselage.
   - Several airframe services.
   - Vertical tail plane.
   - Fuselage mounted engine.
   - Nose wheel u/c.
   - fuselage

   b) The wing group:
   - Wing structure.
   - Fuel system (no fuel).
   - Main u/c. if attached to wing.
   - Wing mounted engine.

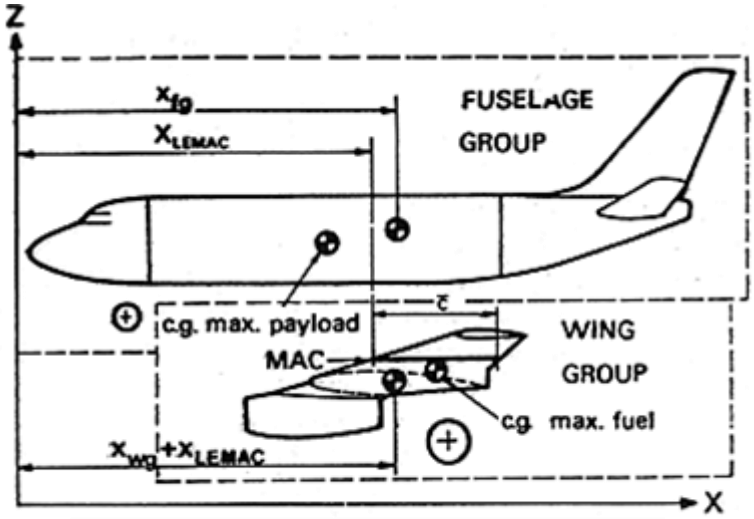

Figure 8.2: Wing group and fuselage group

2. Draw fuselage group with $X-axis$ parallel to cabin floor or propeller axis, determine center of gravity of fuselage group $X_{f.g.}$ for the complete group in longitudinal direction. Using eq.8.1 with reference to a/c nose.
3. The wing group is drawn on a separate transparent sheet. Root chord, tip chord and AMC are indicated. Use equation (8.1) to compute wing group center of gravity ($x_{w.g.}$) as $\%\bar{\bar{C}}$ relative to the mean aerodynamic chord leading edge ($LEMAC$).
4. Assume a value for (x_{OEW}), say ($x_{OEW} \approx 0.25\bar{\bar{C}}$) which is the desire value for most designers.
5. Calculate the coordinate of the wing leading edge relative to the fuselage coordinate system from the following formula.

$$X_{LEMAC} = X_{fg,cg} - x_{OEW} + \frac{W_{wg}}{W_{fg}}\left(x_{wg,cg} - x_{OEW}\right) \qquad \text{... 8.3}$$

6. Transfer each distance with reference to a/c nose to a distance with reference to mean aerodynamic chord leading edge simply as ($x_i = X_i - X_{LEMAC}$). Remember that your calculation for a/c empty weight center of gravity is exactly.

$$\left(x_{OEW} = \frac{X_{OEW} - X_{LEMAC}}{\bar{\bar{C}}}\right) = 0.25\ \%\ \bar{\bar{C}} \qquad \text{... 8.4}$$

7. Compute a load and balance diagram. A window seat rule is applied to civil transport.
8. Estimate the fore and aft limits. The limits must be acceptable, use table (8.3) for comparison.
9. In case of unacceptable c.g. limit, a revise choice of (X_{OEW}) or other revisions are recommended. Repeat the procedure until the result is considered satisfactory.

x_{OEW} : Distance from operational empty weight center of gravity (wing, tail body, u/c main, u/c nose, surfaces controls, nacelles, power plant, etc --- and crew) to the mean aerodynamic mean chord leading edge. The numeric value is usually (% $\bar{\bar{C}}$).

X_{OEW} : Distance from operational empty weight center of gravity (wing, tail body, u/c main, u/c nose, surfaces controls, nacelles, power plant, etc --- and crew) to the fuselage nose. The numeric value is usually(% l_f).

$x_{fg,cg}$: Distance from fuselage group center of gravity (body, tail, u/c if attached, power plant if attached, etc…and crew) to the mean aerodynamic mean chord leading edge. The numeric value is usually (% $\overline{\overline{C}}$).

$X_{fg,cg}$: Distance from fuselage group center of gravity (body, tail, u/c if attached, power plant if attached, etc…and crew) to the fuselage nose. The numeric value is usually (% l_f).

$x_{wg,cg}$: Distance from wing group center of gravity (wing, u/c if attached, power plant if attached) to the mean aerodynamic mean chord leading edge. The numeric value is usually (% $\overline{\overline{C}}$).

$X_{wg,cg}$: Distance from wing group center of gravity (wing, u/c if attached, power plant if attached) to the fuselage nose. The numeric value is usually (% l_f).

8.5. Weight control

Weight is the force with which gravity attracts a body toward the center of the Earth. The force of lift is the only force that counteracts weight and sustains the airplane in flight. However, the amount of lift produced by an airfoil is limited by the airfoil design, angle of attack, airspeed, and air density. If the weight is greater than the lift generated, altitude cannot be maintained.

Designers attempt to make the airplane as light as possible without sacrificing strength or safety. An overloaded airplane may not be able to leave the ground, or if it does become airborne, it may exhibit unexpected and unusually poor flight characteristics. If an airplane is not properly loaded, the initial indication of poor performance usually takes place during takeoff. Excessive weight reduces the flight performance of an airplane in almost every respect. The most important performance deficiencies of the overloaded airplane are:

1. Higher takeoff speed.
2. Longer takeoff run.
3. Reduced rate and angle of climb.
4. Lower maximum altitude.
5. Shorter range (more weight lifted = more work done = more fuel required).
6. Reduced cruising speed.
7. Reduced maneuverability.
8. Higher stalling speed.
9. Higher landing speed.
10. Longer landing roll.
11. Excessive weight on the nose wheel.

The pilot must be knowledgeable in the effect of weight on the performance of the particular airplane being flown. Preflight planning should include a check of performance charts to determine if the airplane's weight may contribute to hazardous flight operations. Excessive weight in itself reduces the safety margins available to the pilot, and becomes even more hazardous when other performance-reducing factors are combined with overweight. The pilot must also consider the

consequences of an Overweight airplane if an emergency condition arises. If an engine fails on takeoff or ice forms at low altitude, it is usually too late to reduce the airplane's weight to keep it in the air.

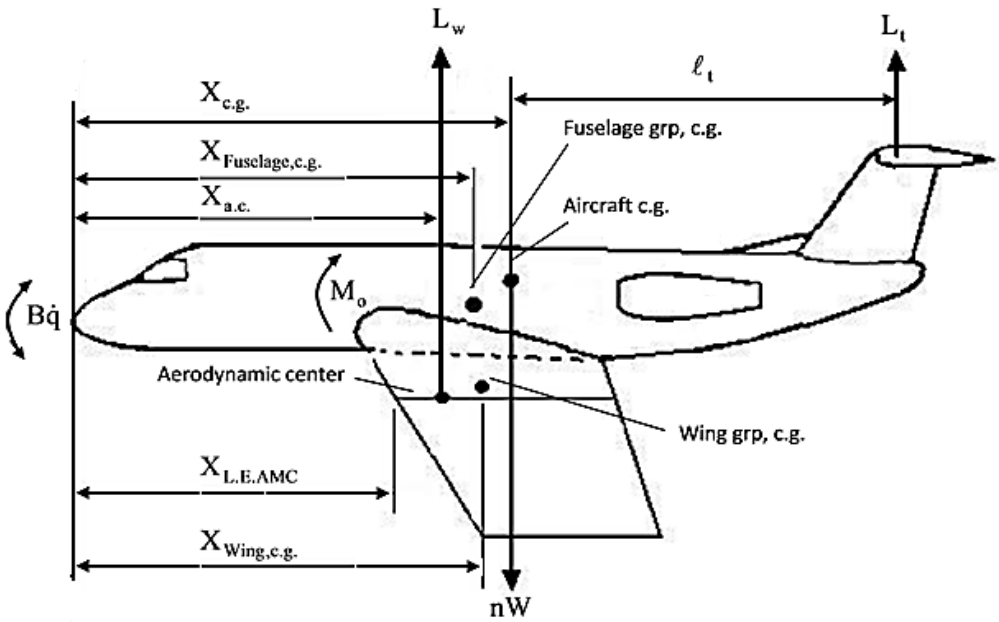

Figure 8·3a : Notation and main dimension, with reference to aircraft nose

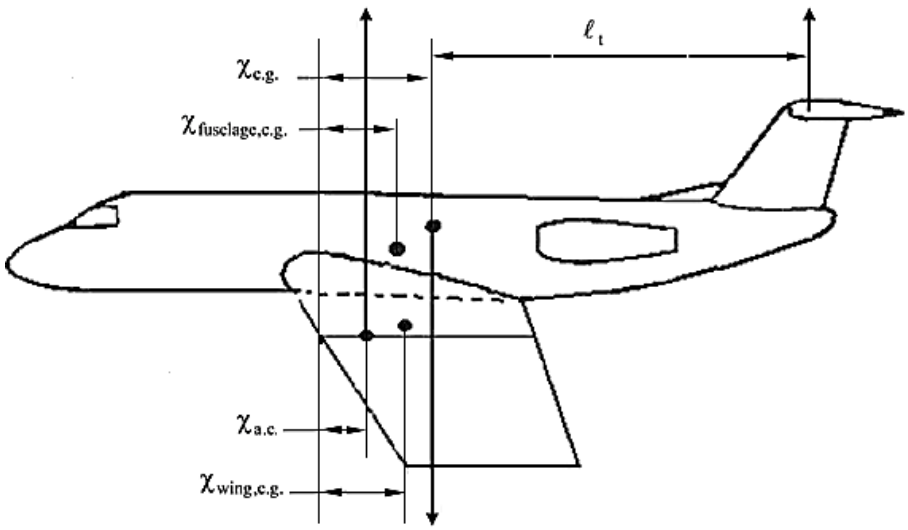

Figure 8.3b: Notation and main dimensions, with reference to aerodynamic mean chord.

GROUP WEIGHT BREAKDOWN			
AIRPLANE TYPE:		DATE:	
ENGINE TYPE:		c.g. POSITION FROM a/c NOSE	
GROUP INDICATION	WEIGHT ( )	MOMENT ARM X (m)	MOMENT WX (N.m)
AIRFRAME STRUCTURE	( )	( )	( )
WING GROUP			
TAIL GROUP			
BODY GROUP			
ALIGHTING GEAR GROUP			
SURFACE CONTROLS GROUP			
ENGINE SECTION OR NACELLE GROUP			
PROPULSION GROUP	( )	( )	( )
ENGINE INSTALLATION AND AFTERBURNERS			
ACCESSORY GEAR BOXES AND DRIVES			
SUPERCHARGERS (FOR TURBO TYPES)			
AIR INDUCTION SYSTEM			
EXHAUST SYSTEM			
OIL SYSTEM AND COOLER			
LUBRICATING SYSTEM			
FUEL SYSTEM			
WATER INJECTION SYSTEM			
ENGINE CONTROLS			
STARTING SYSTEM			
PROPELLER INSTALLATION			
THRUST REVERSERS			
AIRFRAME SERVICES AND EQUIPMENT	( )	( )	( )
AUXILIARY POWER PLANT GROUP			
INSTRUMENTS AND NAV. EQPT. GROUP			
HYDRAULIC AND PNEUMATIC GROUP			
ELECTRICAL GROUP			
ELECTRONICS GROUP			
FURNISHING AND EQUIPMENT GROUP			
AIRCONDITIONING AND ANTI-ICING GROUP			
MISCELLANUOUS			
BASIC (EMPTY) WEIGHT	( )	( )	( )
OPERATIONAL ITEMS	( )	( )	( )
CREW PROVISIONS			
PASSENGER CABIN SUPPLIES			
POTABLE WATER AND TOILET CHEMICALS			
SAFETY EQUIPMENT			
OIL, RESIDUAL FUEL, WATER/METHANOL			
CARGO HANDLING EQUIPMENT, MISC.			
OPERATIONAL EMPTY WEIGHT			
	Σ (W)		Σ (W.N)

Table 8.1: Weight breakdown and aircraft c.g.

	COMPONENT	C.G. LOCATION
STRUCTURE	WING (HALF)	straight wing: 38-42% chord fromL.E at 40% semi-span from centerline swept wing: 70% local distance between front and rear spar, measured from front spar, at 35% semi-span from centerline
	FUSELAGE	distance from fuselage nose, in % of fuselage length (excl. spinner) single tractor engine : 32 - 35 wing-mounted propeller engines : 38 - 40 wing-mounted jet engines : 42 - 45 rear fuselage mounted pods : 47 jet engine buried in fuselage : 45
	TAILPLANE (HALF)	42% chord from LE at 38% semi-span from root chord. Fin, T-tail configuration: 42% chord from LE at 55% of height from root chord
	NACELLES	40% of nacelle length from nose, spinner excluded
	SURFACE CONTROL SYSTEM	100% MAC from LEMAC, autopilot excluded
	ALIGHTING GEAR	at airplane c.g., or determined from location and weight of main and nose undercarriage
	ENGINES AND ACCESSORIES	from engine manufacturer's data
	AIRFRAME SERVICES AND EQUIPMENT	from educated guess, taking into account location of main elements and functions to be powered
	FURNISHING	from subdivision of Table 8-11 and cabin layout
	FILLED FUEL TANK	for prismoid with height ℓ and parallel end faces with area S_1 and S_2 (see Fig. 8-4), at distance $\frac{\ell}{4}\frac{S_1 + 3S_2 + 2\sqrt{S_1S_2}}{S_1 + S_2 + \sqrt{S_1S_2}}$ from plane S_1

Table 8.2: Typical c.g. position for a/c main different parts

	AIRPLANE TYPE	C.G. LIMITS, PER CENT M.A.C.						PAY-LOAD	$\frac{S_h \ell_h}{S\bar{c}}$	hor. tail	$C_{L_{max}}$
		FORWARD		REAR		RANGE					
		takeoff landing	flight	takeoff landing	flight	takeoff landing	flight	% OEW		type **	***
2 JET ENGINES	Aerospatiale Corvette SN601	-	20.0	-	36.0	-	16.0	28.3	.64	V	2.40
	A.C. Jet Commander 1121	20.0	20.0	36.0	36.0	16.0	16.0	20.6	.64	F	1.66
	Lear Jet 25	9.0	9.0	30.0	30.0	21.0	21.0	35.6	.64	F	1.39
	H. Siddeley HS-125 1A/1B	18.0 *	18.0 *	37.5 *	33.5 *	19.5 *	19.5 *	14.0	.69	F	2.44
	Dassault Mystère 20F	14.0	16.0	28.5	28.5	14.5	12.5	23.1	.66	V	2.30
	H.F.B. Hansa	13.0	11.7	23.0	21.7	10.0	10.0	30.9	.71	F	2.00
	Fokker VFW F-28 Mk1000	18.0	17.0	35.0	37.0	17.0	20.0	42.0	.97	V	2.53
	BAC 1-11 Srs. 400	15.0 *	14.0 *	39.0 *	41.0 *	24.0 *	27.0 *	35.3	.85	V	2.38
	Sud. Av. Caravelle 10R	25.0	25.0	41.5	41.5	16.5	16.5	32.3	.56	F	2.10
	McD. Douglas DC-9/10	16.3	15.0	39.0	40.0	22.7	25.0	42.4	1.15	V	2.40
	DC-9/33F	5.9	3.1	34.7	34.7	28.8	31.6	70.8	1.18	V	2.98
	Boeing 737/100	15.0	15.0	35.0	35.0	20.0	20.0	49.4	1.14	V	3.10
	Airbus A-300 B2	11.0	11.0	31.0	31.0	20.0	20.0	37.4	1.07	V	2.65
3 OR 4 JET ENGINES	Lockheed 1011 Tristar	-	12.0	-	32.0	-	20.0	36.1	.93	A	2.57
	Boeing 707/120	16.0	16.0	34.0	34.0	18.0	18.0	38.2	.61	V	1.86
	720/022	15.0	15.0	31.0	31.0	16.0	16.0	31.9	.59	V	2.26
	747/200B	-	12.5	-	32.0	-	19.5	45.8	1.00	V	2.55
	McD. Douglas DC-8/21	16.5	16.5	32.0	32.0	15.5	15.5	27.0	.58	V	2.10
	Lockheed C-141A	19.0	19.0	32.0	32.0	13.0	13.0	50.3	.51	V	2.32
	Lockheed C-5A	19.0	19.0	41.0	41.0	22.0	22.0	67.9	.64	V	2.60
1 PROPELLER ENGINE	Fokker S-11 Instructor	21.5	21.5	27.0	27.0	5.5	5.5	22.2	.43	F	1.25
	Cessna 172, Normal Cat.	15.6	15.6	36.5	36.5	20.9	20.9	64.3	.59	F	2.14
	177, Normal Cat.	5.0	5.0	28.0	28.0	23.0	23.0	58.6	.60	A	1.86
	177, Utility Cat.	5.0	5.0	18.5	18.5	13.5	13.5	58.6	.60	A	1.86
	206 Skywagon	12.2	12.2	39.4	39.4	27.2	27.2	67.3	.77	F	2.16
	Beechcraft B-45 Mentor	20.1	19.0	28.0	28.0	7.9	9.0	17.4	.54	F	2.01
	Piaggio P-148 (3 seater)	22.3	22.3	30.7	30.7	8.4	8.4	26.3	.43	F	1.90
	Pilatus PC-6-H2 Porter	11.0	11.0	34.0	34.0	23.0	23.0	79.9	.67	A	2.28
	Saab 91-B Safir	17.9	17.9	27.1	27.1	9.2	9.2	23.9	.64	F	-
	De Havilland DHC-2 Beaver	17.4	17.4	40.3	40.3	22.9	22.9	49.3	.76	F	-
2 PROPELLER ENGINES	Cessna Model 337	17.3	17.3	30.9	30.9	13.6	13.6	37.1	.51	F	1.78
	Piper PA 30C Twin Comanche	12.0	12.0	27.8	27.8	15.8	15.8	40.7	.44	A	1.66
	Beechcraft Queen Air M. 80	16.0	16.0	29.9	29.9	13.9	13.9	44.9	.73	F	1.88
	Dornier Do 28-D-1	10.7	10.7	30.8	30.8	20.1	20.1	34.7	.67	A	2.36
	DHC-6 Twin Otter	20.0	20.0	36.0	36.0	16.0	16.0	74.0	.93	F	2.37
	Nord 262	16.0	16.0	30.0	30.0	14.0	14.0	48.0	.96	F	2.23
	Fokker VFW F-27 Mk 200	20.0	18.7	38.0	40.7	18.0	22.0	55.8	.96	F	2.94
	Hurel Dubois HD 32	23.5	23.5	46.5	46.5	23.0	23.0	36.5	1.32	F	2.70
	Convair 240	15.0	8.5	31.0	33.0	16.0	24.5	33.9	1.07	F	2.33
	340	13.0	8.5	34.0	35.0	21.0	26.5	56.0	1.03	F	2.61
	H. Siddeley Andover C.Mk 1	13.3 *	13.3 *	36.0 *	36.0 *	22.7 *	22.7 *	53.6	1.09	F	2.88
4 PROPELLER ENGINES	Bréguet 941	23.0	23.0	32.0	32.0	9.0	9.0	70.0	1.05	V	7.19
	Douglas DC-6	16.0	12.0	33.0	35.0	17.0	23.0	29.4	1.04	F	2.77
	Lockheed 188C Electra	15.0	13.0	32.0	33.0	17.0	20.0	53.6	.80	F	2.54
	Bristol 175 Britannia	13.0 *	12.0 *	34.5 *	35.5 *	21.5 *	23.5 *	37.3	.97	F	2.56
	Lockheed L-1049 H	18.0	15.0	32.0	34.0	14.0	19.0	44.9	1.15	F	2.60
	L-1649 A	15.0	12.0	32.0	34.0	17.0	22.0	17.5	1.12	F	2.53
	C-130 E	15.0	15.0	30.0	30.0	15.0	15.0	51.4	1.00	F	2.28
	Canadair CL-44 C	12.2	12.2	30.5	31.4	18.3	19.2	22.8	1.14	F	2.56

* per cent SMC

** F = fixed stabilizer, V = variable incidence stabilizer, A = all-movable tail

*** flap angle for landing

Table 8.3: c.g. limits for different type of aircrafts

9. Payload-Range Diagram

It is a diagram that shows the interrelation ship between various airplane payload that can be carried and flight range taking into consideration other limitations. Cargo and passenger can be changed into fuel and vice versa

The actual takeoff weight, landing weight and payload for an aircraft particular flight should never exceed the limiting weight define bellow:

9.1. Definitions:

1. Operational Landing Weight (OLW).

   It is the maximum weight authorized for landing, and it is the lowest value of the following:

   a. Maximum landing weight ($MLW = 0.95 * MTOW$).
   b. Permissible landing weight based on available performance.
   c. Maximum zero fuel weight ($MZFW$) plus the fuel load on landing.

2. Operational Takeoff Weight ($OTOW$).

   Is the maximum weight authorized for takeoff, and it is the lowest value of the following:

   a. Maximum takeoff weight.
   b. Maximum takeoff weight based on available performance.
   c. Operational landing weight plus trip fuel.
   d. Maximum zero fuel weight plus fuel on takeoff.
   e. Takeoff weight restricted by operation weight (due to useful weight).

3. Payload.

   It is the weight of passengers and their baggage, cargo and /or mail that can be loaded in the aircraft without exceeding the MZFW.

4. Operation Empty Weight (OEW).

   It is the weight of the airplane without payload and fuel.

5. Maximum Zero Fuel Weight ($MZFW$).

   It is the maximum weight load of an aircraft less the weight of total fuel load (and other consumable propulsion fluids).

6. Total fuel.

   It is all usable fuel, engine injection fluid and other consumable propulsion agents. And it is:

   a. Fuel consumed during run up and taxing prior to take off.
   b. Trip fuel, the fuel consumed during flight up to the moment of touch down in landing.
   c. Additional fuel for holding and diversion.
   d. Reserve fuel, according to the relevant operation rules.

9.2. Payload-Range calculations:

The range, which means the distance that the airplane can fly, is usually evaluated from Breguet range formula which gives a good approximating. Figure (9.1) shows a typical payload-range diagram. We first start to drive the Breguet endurance formula.

❖ <u>For propeller aircraft:</u>

The amount rate of fuel that the airplane consumes to produce the required shaft horse power:

In British units :

$$\dot{W}_{fuel} = SHP_{req} * C_p = \frac{P_{req}}{\eta_p} * C_p \qquad \ldots 9.1$$

$$1\ hp = \frac{550\ (ft.lb/sec) * 3600(sec/hr)}{5280(ft/mile)} = 375\frac{lb.mile}{hr} \qquad \ldots 9.2a$$

$$1\ hp = \frac{550\ (ft.lb/sec) * 3600(sec/hr)}{6076(ft/n.m)} = 326\frac{lb.\ n.m}{hr} \qquad \ldots 9.2b$$

$$\dot{W}_{fuel} = \frac{-dW}{dt}$$

$$dt = -\dot{W}_{fuel}dW = -\frac{\eta_p}{C_p} * \frac{1}{P_{req}}dW \qquad \ldots 9.3$$

$$dt = -\frac{\eta_p}{C_p}\frac{375}{D * V}dW = -375\frac{\eta_p}{C_p}\frac{L}{D * V}\frac{dW}{W} \qquad \ldots 9.4$$

$$\Delta t = -\int_1^2 375\frac{\eta_p}{C_p}\frac{L}{D * V}\frac{dW}{W} = 375\frac{\eta_p}{C_p}\frac{L}{D * V}\ln\frac{W_1}{W_2} \qquad V\ in\ mile/hr \qquad \ldots 9.5a$$

$$\Delta t = -\int_1^2 326\frac{\eta_p}{C_p}\frac{L}{D * V}\frac{dW}{W} = 326\frac{\eta_p}{C_p}\frac{L}{D * V}\ln\frac{W_1}{W_2} \qquad V\ in\ knots \qquad \ldots 9.5b$$

Where $\dot{W}_{fuel}$ is fuel consuming in lb/hr and $C_p \approx 0.45 \div 0.55$ is specific fuel consumption in $lb/hp.lb$ and $\eta_p \approx 0.85$ is propeller efficiency and V is the true air velocity. Equation (9.5) is called Berguet endurance formula. To drive Berguet range formula, then:

$$V = \frac{ds}{dt}$$

$$ds = V.dt = -\frac{\eta_p}{C_p} * \frac{V}{P_{req}}dW = -375\frac{\eta_p}{C_p}\frac{L * V}{D * V}\frac{dW}{W} \qquad \ldots 9.6$$

$$Range = ds = -\int_1^2 375\frac{\eta_p}{C_p}\frac{L}{D}\frac{dW}{W} = 375\frac{\eta_p}{C_p}\frac{L}{D}\ln\frac{W_1}{W_2} \qquad V\ in\ mile/hr \qquad \ldots 9.7a$$

$$Range = ds = -\int_1^2 326\frac{\eta_p}{C_p}\frac{L}{D}\frac{dW}{W} = 326\frac{\eta_p}{C_p}\frac{L}{D}\ln\frac{W_1}{W_2} \qquad V\ in\ knots \qquad \ldots 9.7b$$

In S.I. units

$$\Delta t = -\int_1^2 \frac{\eta_p}{C_p}\frac{L}{D * V}\frac{dW}{W} = \frac{\eta_p}{C_p}\frac{L}{D * V}\ln\frac{W_1}{W_2}$$

$$\Delta t = \frac{\eta_p}{C_p}\frac{L}{D * V}\ln\frac{W_1}{W_2}\ \ in\ \text{sec} \qquad C_p \approx 1.11 * 10^{-6}\ N/W.s\ \ and\ \ V\ \ in\ m/s \qquad \ldots 9.8a$$

$$\Delta t = 3600\frac{\eta_p}{C_p}\frac{L}{D * V}\ln\frac{W_1}{W_2}\ \ in\ hr \qquad C_p \approx 4.00\ N/kW.hr \qquad and\ \ V\ \ in\ km/hr \qquad \ldots 9.8b$$

$$\Delta t = 367\frac{\eta_p}{C_p}\frac{L}{D * V}\ln\frac{W_1}{W_2}\ \ in\ hr \qquad C_p \approx 0.408\ kg/kW.hr \qquad and\ \ V\ \ in\ km/hr \qquad \ldots 9.8c$$

$$Range = ds = V.dt = -\int_1^2 \frac{\eta_p}{C_p}\frac{L*V}{D*V}\frac{dW}{W} \qquad ...9.9$$

$$Range = \frac{\eta_p}{C_p}\frac{L}{D}\ln\frac{W_1}{W_2} \qquad in\ m \qquad C_p \approx 1.11*10^{-6}\ N/W.s \qquad ...9.10a$$

$$Range = 3600\frac{\eta_p}{C_p}\frac{L}{D}\ln\frac{W_1}{W_2} \qquad in\ km \qquad C_p \approx 4.00\ N/kW.hr \qquad ...9.10a$$

$$Range = 367\frac{\eta_p}{C_p}\frac{L}{D}\ln\frac{W_1}{W_2} \qquad in\ km \qquad C_p \approx 0.408\ kg/kW.hr \qquad ...910a$$

❖ <u>For jet aircraft:</u>

$$\dot{W}_{fuel} = T_{req} * C_j \qquad ...9.11$$

$$\dot{W}_{fuel} = \frac{-dW}{dt}$$

$$dt = -\dot{W}_{fuel}dW = -\frac{1}{T_{req}*C_j}dW = -\frac{1}{C_j}\frac{L}{D}\frac{dW}{W} \qquad ...9.12$$

$$\Delta t = -\int_1^2 \frac{1}{C_j}\frac{L}{D}\frac{dW}{W} = \frac{1}{C_j}\frac{L}{D}\ln\frac{W_1}{W_2} \qquad ...9.13$$

Where $C_j \approx 0.45 \div 1.0$ is specific fuel consumption in $lb/lb.hr$ or $N/N.hr$

$$Range = ds = V.dt = -\int_1^2 \frac{\eta_p}{C_p}\frac{L*V}{D}\frac{dW}{W} \qquad ...9.14$$

$$Range = \frac{1}{C_j}V\frac{L}{D}\ln\frac{W_1}{W_2} \qquad in\ feet \qquad V\ in\ ft/hr \qquad ...9.15a$$

$$Range = \frac{1}{C_j}V\frac{L}{D}\ln\frac{W_1}{W_2} \qquad in\ mile \qquad V\ in\ mile/hr \qquad ...9.15b$$

$$Range = \frac{1}{C_j}V\frac{L}{D}\ln\frac{W_1}{W_2} \qquad in\ n.m. \qquad V\ in\ knots \qquad ...9.15c$$

$$Range = \frac{1}{C_j}V\frac{L}{D}\ln\frac{W_1}{W_2} \qquad in\ km \qquad V\ in\ km/hr \qquad ...9.15d$$

$$1\ knots = 1\ n.m./hr = 1.150779\ mile/hr = 6076.115\ ft/hr = 1.852\ km/hr$$

For propeller aircraft: aerodynamic efficiency, (L/D), should be maximum for maximum range:

$$\left.\frac{L}{D}\right)_{max} = \frac{C_{L,\min drag}}{C_{D,min\ drag}} = \frac{C_{L,\min drag}}{2C_{Do}} = \frac{\sqrt{(C_o/k)}}{2C_{Do}} = \frac{1}{2\sqrt{kC_{Do}}}$$

For jet aircraft: the, term$V_t(L/D)$, should be maximum should be maximum for maximum range:

$$U_t\ L/D)_{max} = U_{t,max.range} * \left(C_{L,max.range}/C_{D,max.range}\right)$$

$$C_{L_{max.range}} = \sqrt{C_{D,o}/3K} = C_{L,\min drag}/\sqrt{3}$$

$$C_{D,\max range} = 4\,C_{D,o}/3$$

$$U_{t,max.range} = \sqrt{\frac{2(W/S)}{\rho_o C_{L,\max\ range}}} = 1.316 * \sqrt{\frac{2(W/S)}{\rho_o C_{L,\min\ drag}}}$$

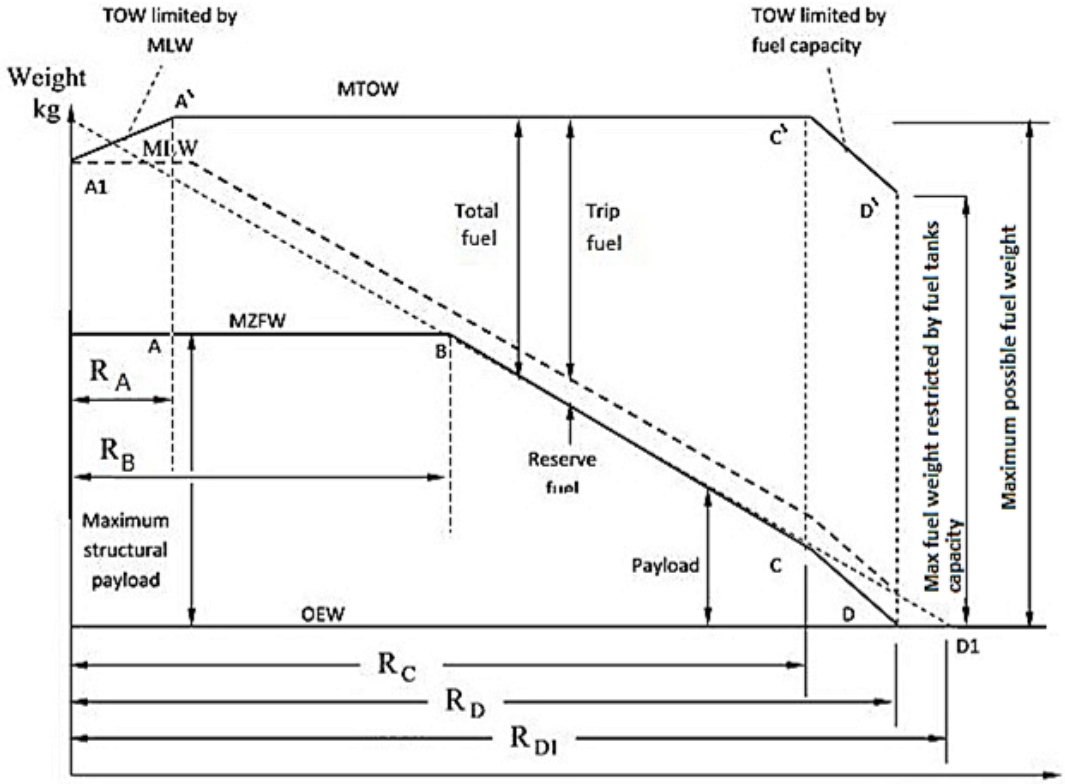

Figure 9.1: Typical payload-range diagram

R_A : Minimum range due to MLW restriction.

R_B : Maximum payload range.

R_C : Maximum range based on maximum available fuel based on fuel tank capacity.

R_D : Maximum range based on maximum available fuel based on fuel tank capacity.

R_{D1} : Maximum range based on maximum possible fuel.

$C\acute{C}$: Maximum useful fuel weight restricted by fuel tanks capacity.

$D\acute{D}$: Maximum useful fuel weight restricted by fuel tanks capacity.

$D\acute{C}$: Maximum possible fuel weight.

❖ For ranges $\leq R_B$:

1. Maximum payload is maximum structural payload, which is limited by allowable floor loading.
2. OTOW is limited by MLW.
3. MZFW plus reserve fuel $\leq$MLW.
4. Point B corresponds to the maximum flight range R_B with maximum payload and reserve fuel, with relevant cruising condition.

❖ For ranges $\leq R_C$:

Usable fuel load limited by the fuel tank capacity and the operating weight (reaches its limit point C.

❖ For ranges $> R_C$:

A considerable reduction in take-off weight is noticed, which results in a further payload reduction.

❖ For point D:

No payload and R_D is maximum range due to useful fuel load.

For normal commercial aircraft, region CD is of miner importance, and R_C is frequently referred to as maximum range. Both R_C and R_D may be increased by adding additional fuel tanks internally or externally.

Ex. Draw payload range diagram for a turboprop aircraft having the following data:

$MTOW = 1275\ kg$
$OEW = 7459\ kg$
$Payload = 4140\ kg$
$(L/D)_{max} = 15.127$
$\gamma_{fuel} = 0.8$
$Volume\ of\ fuel\ tanks = 4.958\ m^3$
$Designed\ range = 1000\ km.$
$S\ f\ c, c = 0.3\ kg/kW/hr$
$Propeller\ efficiency, \eta_p = 0.8$

<u>Solution.</u>

$Maximum\ possible\ fuel\ weight = MTOW - OEW = 12750 - 7459 = 5291\ kg.$

Maximum available fuel weight = volume of fuel tanks * fuel density.

$= 4.958 * 800 = 3966.4\ kg.$

$MZFW = OEW + payload = 7459 + 4140 = 11599\ kg.$

From Breguet formula for range

$Range, propeller\ a/c = 367(1/c) * \eta * (L\ /\ D)_{max} ln(W_1/W_2)$

1. Maximum range with full payload

   $W_1 = MTOW = 12750\ kg$

   $W_2 = MZFW = 11599\ kg$

$$R_B = 367 * \frac{1}{0.3} * 0.8 * 15.127 * ln\frac{12750}{11599} = 1400\ km$$

2. Maximum possible range:

   $W_1 = MTOW = 12750\ kg$

   $W_2 = OEW = 7459\ kg$

$$R_{D1} = 367 * \frac{1}{0.3} * 0.8 * 15.127 * ln\frac{12750}{7459} = 7936\ km$$

3. Maximum available range:

   $W_1 = MTOW = 12750\ kg$

   $W_2 = MTOW - fuel\ tank\ capacity$

$$= 12750 - 3966.4 = 8783.6\ kg$$

$$R_C = 367 * \frac{1}{0.3} * 0.8 * 15.127 * ln\frac{12750}{8783.6} = 5515\ km$$

4. Maximum available range:

$$W_1 = OEW + fuel\ tank\ capacity$$

$$= 7459 + 3966.4 = 11425.4\ kg$$

$$W_2 = OEW = 7459\ kg$$

$$R_D = 367 * \frac{1}{0.3} * 0.8 * 15.127 * ln\frac{11425.4}{7459} = 632.8\ km$$

5. Minimum allowable range:

$$W_1 = MTOW = 12750\ kg$$

$$W_2 = MLW = 0.95 * 12750$$

$$R_A = 367 * \frac{1}{0.3} * 0.8 * 15.127 * ln\frac{1}{.95} = 760\ km$$

6. What will be the landing weight if the aircraft flew about 1000 kg?

$$W_1 = MTOW = 12750\ kg\ W_2 = OLW$$

$$1000 = 367 * \frac{1}{0.3} * 0.8 * 15.127 * ln\frac{12750}{W_2}$$

$$landing\ weight\ = 11917.2\ kg$$

7. Reserve fuel = landing weight - MZFW = 11917.2 – 11599 = 318.2 kg.

   This amount of fuel should be sufficient to account for: -

   a. Descent and climb stages.
   b. 200 km diversion.
   c. 0.75 hr. holding.

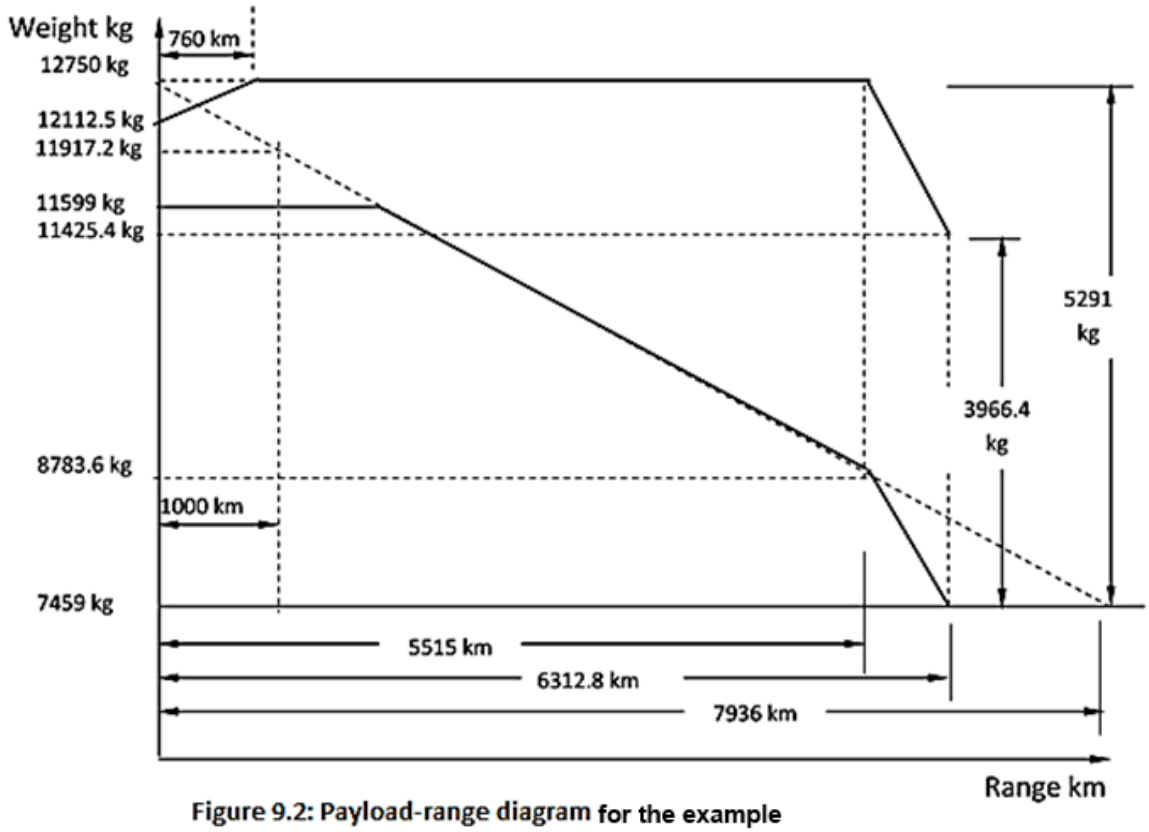

Figure 9.2: Payload-range diagram for the example

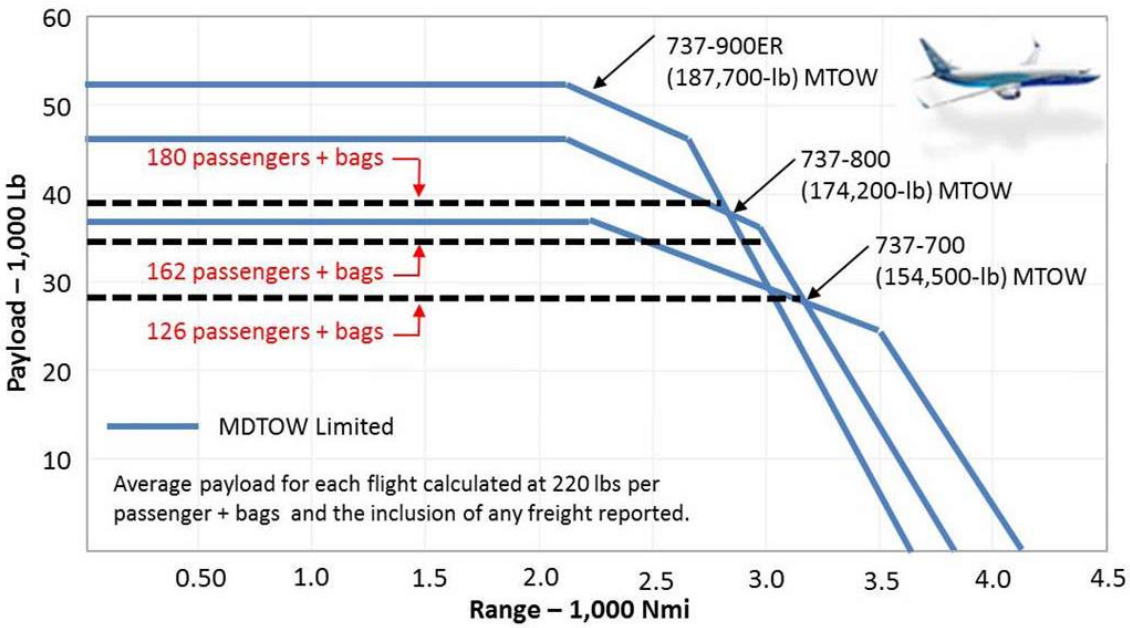

Aircraft Maximum Design Weights (Lb)

Maximum Taxi Weight	*174,700*
Maximum Takeoff Weight	*174,200*
Maximum Landing Weight	*146,300*
Maximum Zero Fuel Weight	*138,300*
Operator Empty Weight	*90,000*

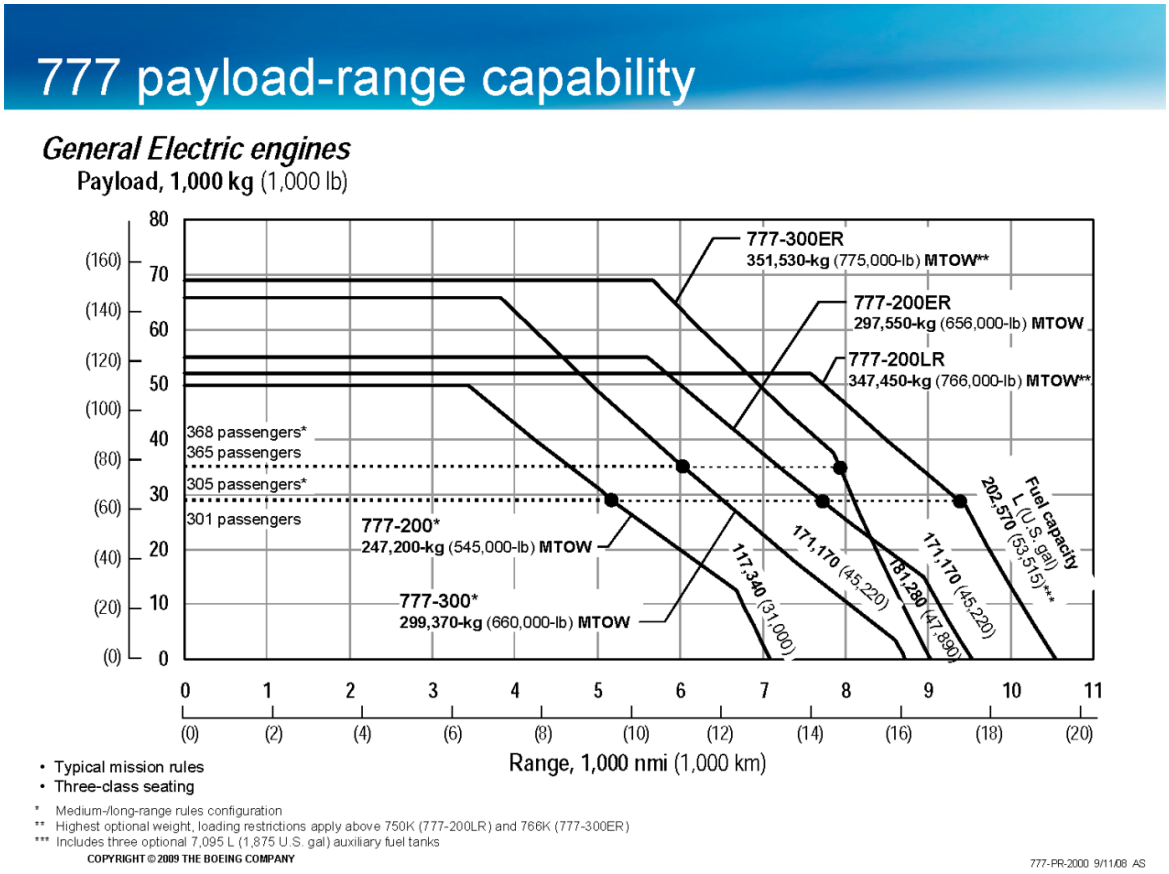
777 payload-range capability
General Electric engines
Payload, 1,000 kg (1,000 lb)
777-300ER
351,530-kg (775,000-lb) MTOW**
777-200ER
297,550-kg (656,000-lb) MTOW
777-200LR
347,450-kg (766,000-lb) MTOW**
368 passengers*
365 passengers
305 passengers*
301 passengers
777-200*
247,200-kg (545,000-lb) MTOW
777-300*
299,370-kg (660,000-lb) MTOW
117,340 (31,000)
171,170 (45,220)
181,280 (47,890)
171,170 (45,220)
Fuel capacity
202,570 (53,515)***
L (U.S. gal)
Range, 1,000 nmi (1,000 km)
• Typical mission rules
• Three-class seating
* Medium-/long-range rules configuration
** Highest optional weight, loading restrictions apply above 750K (777-200LR) and 766K (777-300ER)
*** Includes three optional 7,095 L (1,875 U.S. gal) auxiliary fuel tanks
COPYRIGHT © 2009 THE BOEING COMPANY
777-PR-2000 9/11/08 AS

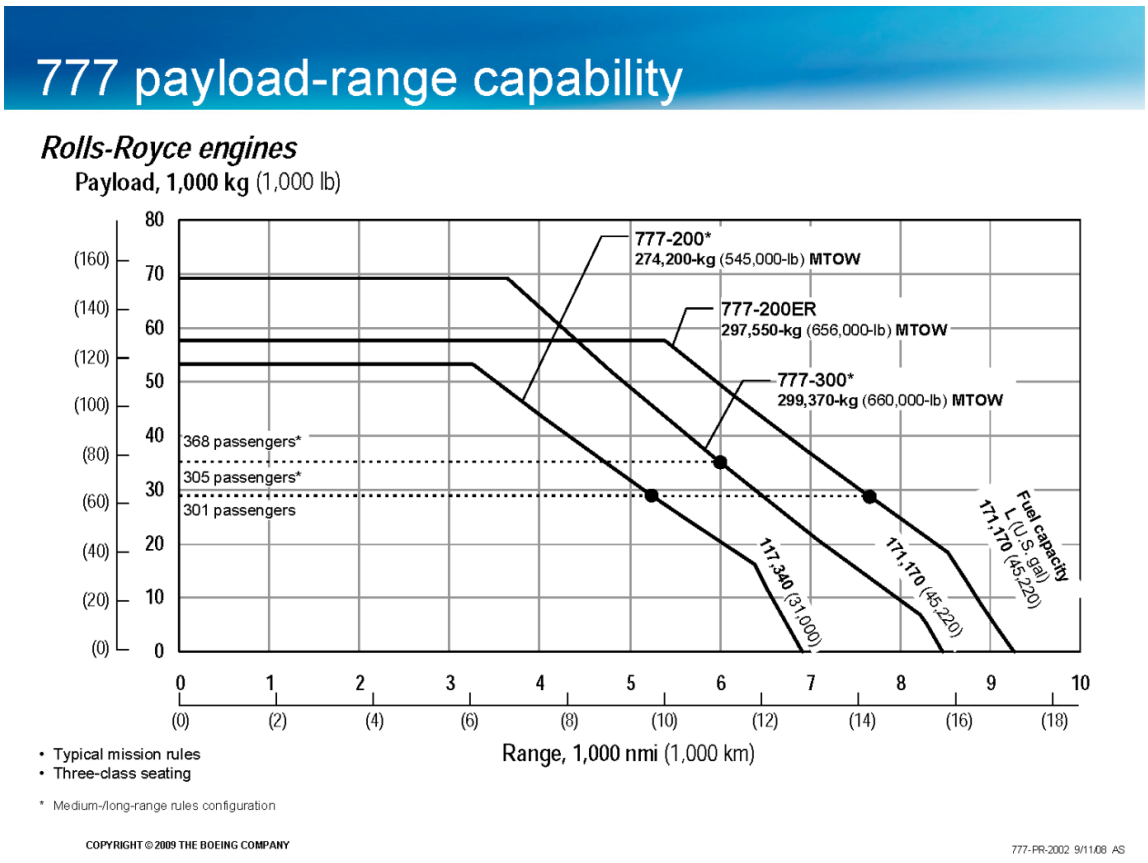
777 payload-range capability
Rolls-Royce engines
Payload, 1,000 kg (1,000 lb)
777-200*
274,200-kg (545,000-lb) MTOW
777-200ER
297,550-kg (656,000-lb) MTOW
777-300*
299,370-kg (660,000-lb) MTOW
368 passengers*
305 passengers*
301 passengers
117,340 (31,000)
171,170 (45,220)
171,170 (45,220)
Fuel capacity
L (U.S. gal)
Range, 1,000 nmi (1,000 km)
• Typical mission rules
• Three-class seating
* Medium-/long-range rules configuration
COPYRIGHT © 2009 THE BOEING COMPANY
777-PR-2002 9/11/08 AS

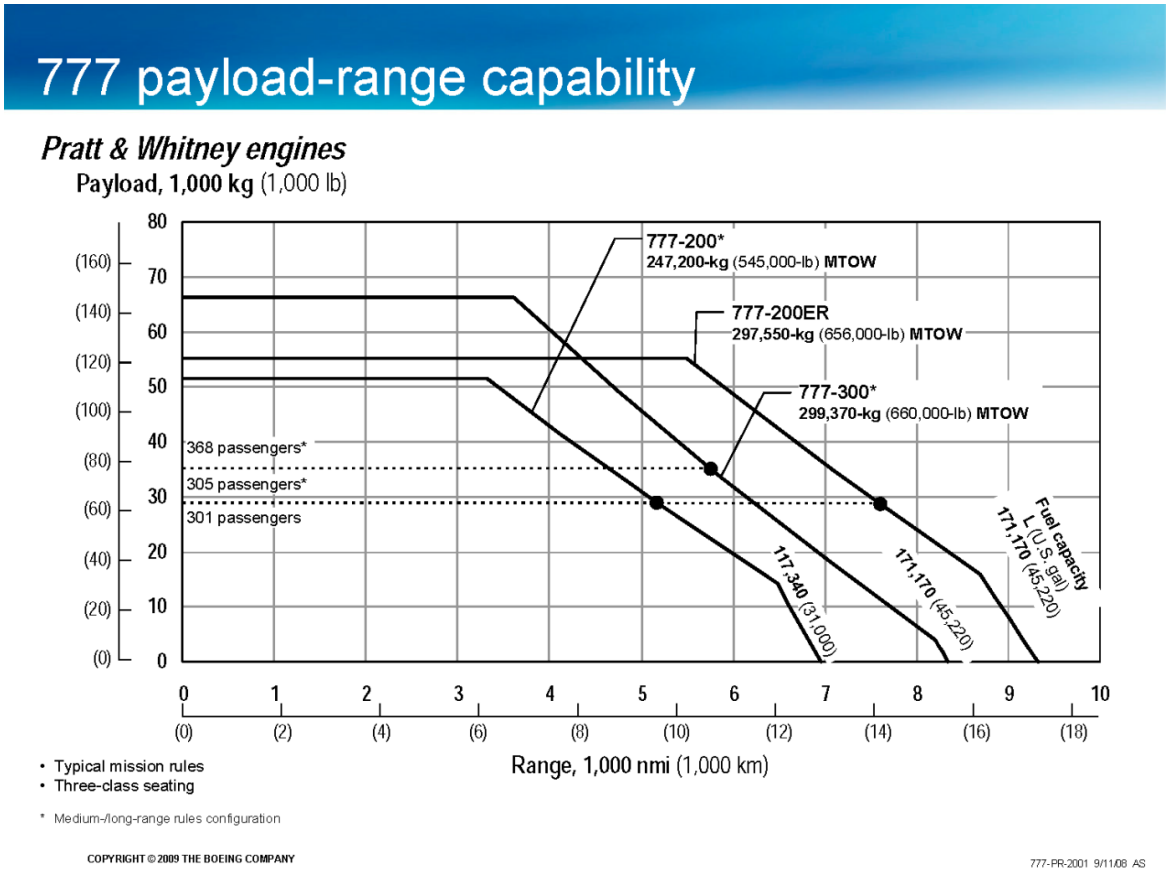
777 payload-range capability
Pratt & Whitney engines
Payload, 1,000 kg (1,000 lb)
80
70
60
50
40
30
20
10
0
(160)
(140)
(120)
(100)
(80)
(60)
(40)
(20)
(0)
777-200*
247,200-kg (545,000-lb) MTOW
777-200ER
297,550-kg (656,000-lb) MTOW
777-300*
299,370-kg (660,000-lb) MTOW
368 passengers*
305 passengers*
301 passengers
117,340 (31,000)
171,170 (45,220)
Fuel capacity
L (U.S. gal)
171,170 (45,220)
0
1
2
3
4
5
6
7
8
9
10
(0)
(2)
(4)
(6)
(8)
(10)
(12)
(14)
(16)
(18)
Range, 1,000 nmi (1,000 km)
• Typical mission rules
• Three-class seating
* Medium-/long-range rules configuration
COPYRIGHT © 2009 THE BOEING COMPANY
777-PR-2001 9/11/08 AS