UNIVERSITY OF TECHNOLOGY
MECHANICAL ENGINEERING DEPARTMENT
Final Examination 2015-2016

Subject: Theory of Machines
Class : 3rd year (all)
Examiners: Dr. Nabil Noor & Dr. Ibtissam Mahdi

Date: 07/06/2016
Time: 3 hrs.

(Answer any five questions)
All questions carry equal marks – 20 marks each

Q1/ The ends of bar AB are limited to move along the paths as shown in Figure 1. At a given instant, A has a velocity of 2.45 m/s and an acceleration of 1 m/s^2. Determine, graphically, the angular velocity and angular acceleration of AB at this instant.

Q2/ The motor on the car wash sprayer in Figure 2 rotates ccw at a constant rate of 120 rpm. At the instant when $\theta = 90°$, use relative acceleration method to graphically determine the angular velocity and angular acceleration of the nozzle arm (link DC).

Q3/ A planetary gear train is shown in Figure 3. The arm serves as the input to the train. Gear 1 is fixed and has 20 teeth. Gear 4 has 22 teeth and is compound with gear 5, which has 32 teeth. Gear 5 mates with the ring gear (gear 6), which serves as the output from the train and has 146 teeth. Determine the rotational velocity of all members of this gear train when the input shaft rotates at 680-rpm cw.

Q4/ Figure 4 shows a mechanism used to crush rocks. The crank AB is moving slowly, and inertial forces can be neglected. In the position shown, determine the torque (T_{12}) required to move the crank AB and crush the rocks.

Q5/ A shaft supported in bearings 1.6 m apart projects 400 mm beyond bearings at each end. It carries three pulleys one at each end and one at the center of its length. The masses of the end pulleys are 40 kg and 22 kg and their centers of mass are at 12 mm and 18 mm respectively from the shaft axes. The mass of the center pulley is 38 kg and its center of mass is 15 mm from the shaft axis. The pulleys are arranged in a manner that they give static balance. Determine:

(i) the relative angular positions of the pulleys
(ii) the dynamic forces developed on the bearings when the shaft rotates at 210 rpm

Q6/ Answer either (a) or (b):

a/ The turbine rotor of a ship has a mass of 750 kg, rotates at 5000 rpm and may be considered as equivalent to a uniform disc 600 mm in diameter. The ship is pitching 10° above and 10° below the horizontal and having a period of 10 s. The rotor turns in a clockwise direction when viewed from the bow. The distance between the bearings is 1.2 m (see Figure 5). Determine: (i) the maximum value of the bearing reactions due to gyroscopic effect, stating its plane of action, (ii) the direction of yaw as the bow rises.

b/ A crossed belt drive connects two parallel shafts 2 m apart. The driving and driven shafts rotate at 350 rpm and 140 rpm, respectively and the driven pulley is 400 mm in diameter. The belt is 5 mm thick and 80 mm wide. The coefficient of friction is 0.3 and the maximum permissible stress in the belt is 1.5 MN/m^2. Determine: (i) diameter of the driving pulley, (ii) maximum power transmitted, (iii) required initial belt tension.

Good Luck

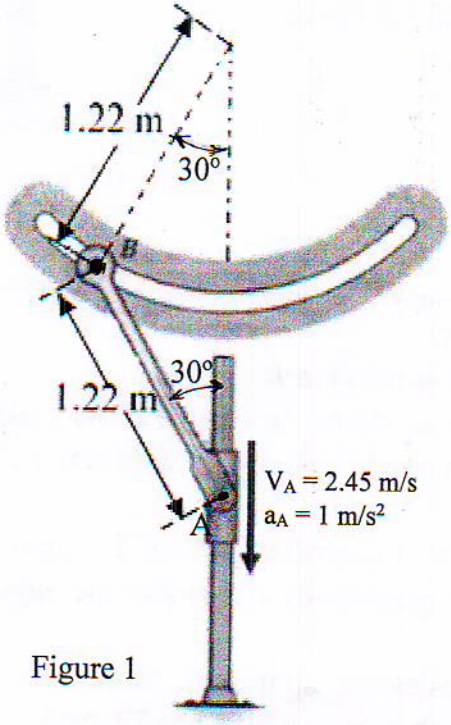

Figure 1

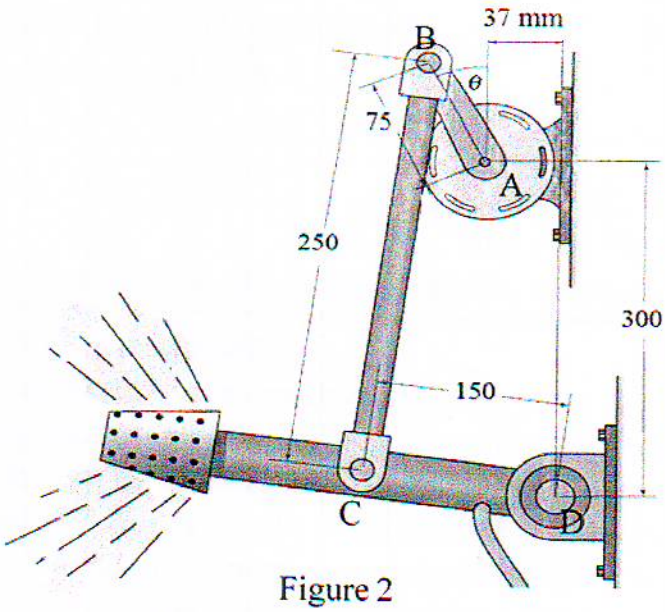

Figure 2

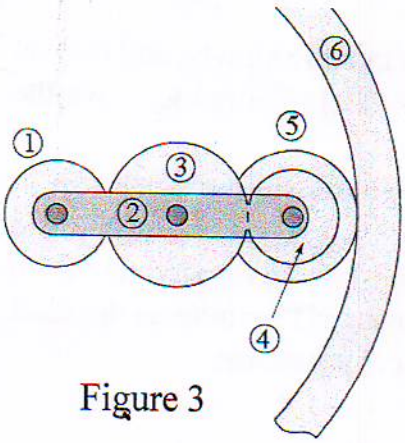

Figure 3

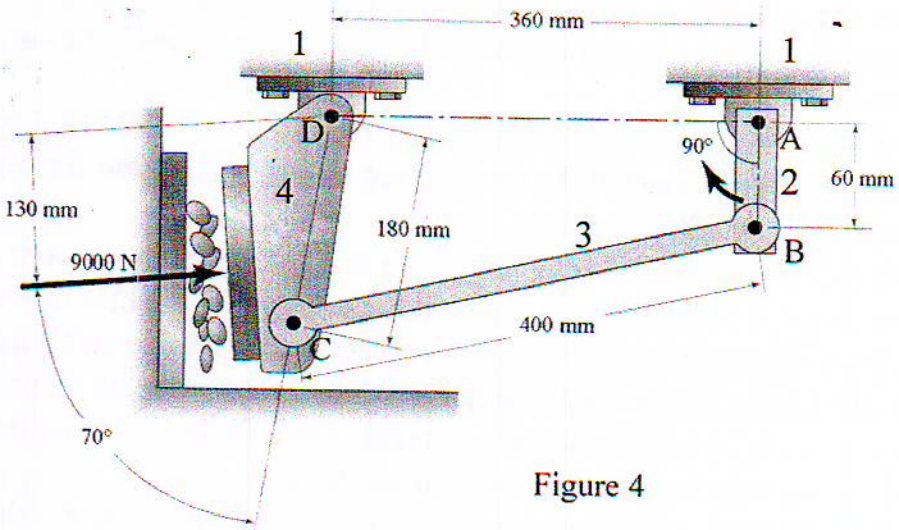

Figure 4

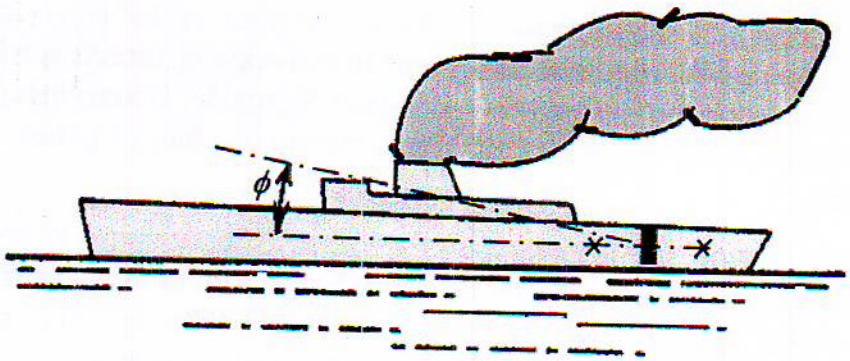

Figure 5

* الحلول النموذجية لأسئلة مادة نظرية الآلات *

2016 - 2015 العام

الدور الأول

Q1/ given: $V_A = 2.45$ m/s ; $a_A = 1$ m/s^2

required: ω_{AB} and α_{AB}.

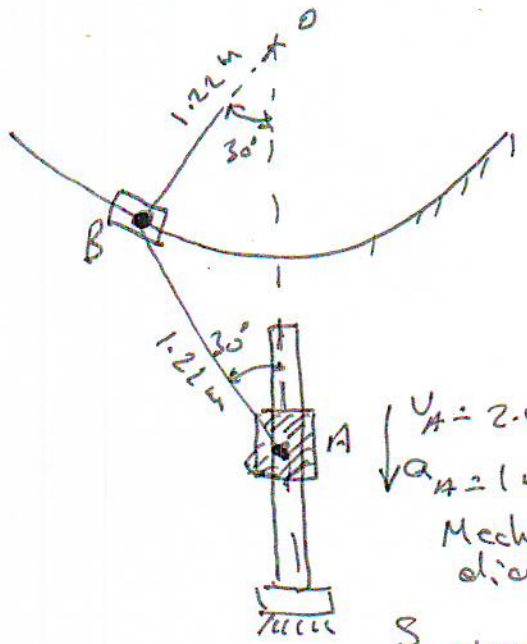

- Draw the velocity polygon with a suitable scale (say $S_V = 40$ mm/(m/s)) as shown in the Figure.

From the velocity polygon:

$V_B = ^{ob}/_{S_V} = 2.45$ m/s

and $V_{B/A} = ab/S_V = 2.45$ m/s

$\because V_{B/A} = \omega_{AB} \cdot AB$

$\therefore \omega_{AB} = V_{B/A} / AB = 2.45/1.22 = 2.008$ rad/s (cw)

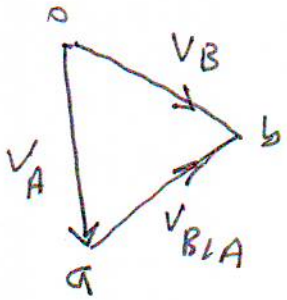

Velocity polygon

$S_V = 40$ mm/(m/s)

$\vec{a}_B = \vec{a}_A + \vec{a}_{B/A}$

$a^n_B + a^t_B = a_A + a^n_{B/A} + a^t_{B/A}$

$a^n_B = \frac{V_B^2}{OB} = \frac{2.45^2}{1.22} = 4.92$ m/s^2

a^t_B = unknown ($\perp$ OB)

$a_A = 1$ m/s^2 ↓

$a^n_{B/A} = V^2_{B/A}/AB = 4.92$ m/s^2

$a^t_{B/A}$ = unknown ($\perp$ link AB)

Let $S_a = 20$ mm/(m/s^2)

Now draw the acceleration polygon as shown:

From the acceleration polygon, we get

$$a^t_{B/A} = \frac{xb}{S_a} = \frac{268.8338}{20}$$

$$= 13.44 \text{ m/s}^2$$

$\because a^t_{B/A} = \alpha_{AB} \cdot AB$

$\therefore \alpha_{AB} = a^t_{B/A} / AB$

$= 13.44 / 1.22 = 11.016$ rad/s^2 ↻

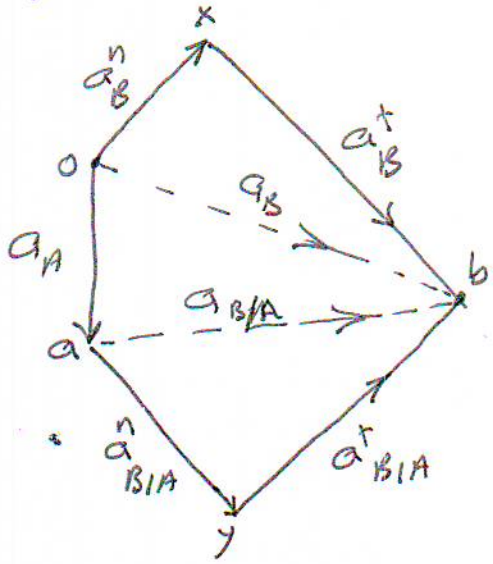

acceleration polygon

$S_a = 20 \text{ mm} / (\text{m/s}^2)$

Q2/ $N = 120$ rpm (constant) ccw

$AB = 75$ mm

$BC = 250$ mm

$CD = 152$ mm

$\theta = 90°$

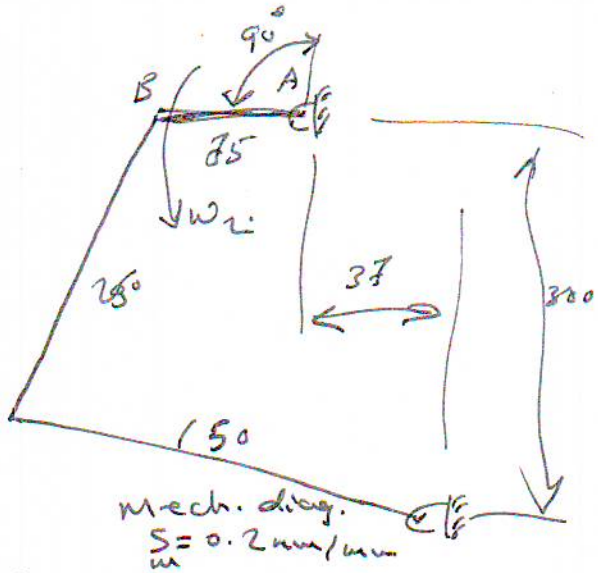

$V_B = \omega_2 \times AB = 12.566 * 75$

$= 942.48$ mm/s

- Draw the velocity polygon with a suitable scale (say $S_v = 0.1$ mm/(mm/s)) as show.

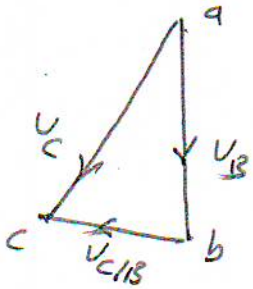

velocity polygon

$S_v = 0.1$ mm/(mm/s)

- From the velocity polygon

$V_c = ac / S_v = 96.291 / 0.1 = 962.91$ mm/s

$\therefore \omega_4 = V_c / DC = 962.91 / 150 \simeq \underline{6.42}$ rad/s ↺ (ccw)

and $V_{c/B} = cb / S_v = 33.39 / 0.1 = 333.9$ mm/s

$\vec{a_c} = \vec{a_B} + \vec{a_{c/B}}$

$a_c^n + a_c^t = a_B^n + a_B^t + a_{c/B}^n + a_{c/B}^t$

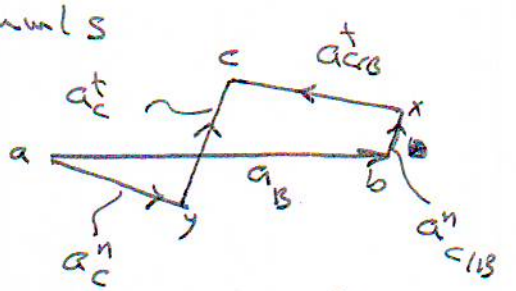

acceleration polygon

$S_a = 10$ mm/(m/s²)

$a_B^n = V_B^2 / AB = 942.48^2 / 75 = 11.843$ m/s²

$a_B^t =$ zero ($\omega_2 =$ constant, i.e., $\alpha_2 = 0$)

$a_{c/B}^n = V_{c/B}^2 / CB = 333.9^2 / 250 = 0.4459$ m/s²

$a_{c/B}^t =$ unknown ($\perp$ link 3)

$a_c^n = V_c^2 / DC = 962.91^2 / 150 = 6.1813$ m/s²

$a_c^t =$ unknown ($\perp$ link 4)

From the acceleration polygon

~~$a_c^t = 33.501/10 =$~~

$a_c^t = y_c / S_a = 33.501 / 10 = 3.3501 \ m/s^2$

$\therefore \ \alpha_4 = \alpha_{CD} = a_c^t / c_D = 3.3501 / 0.15 = \underline{\underline{22.334}} \ rad/s^2$ (cw)

Q3/

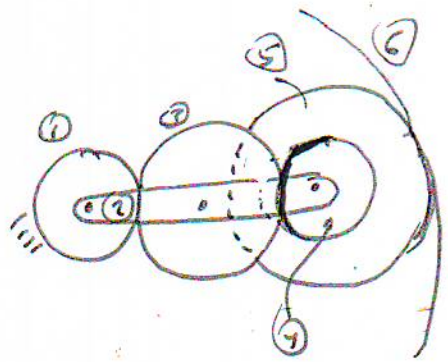

$T_1 = 20$ teeth

$T_4 = 22$ teeth

$T_5 = 32$ teeth

$T_6 = 146$ teeth

$N_2 = 680$ rpm cw

solution

$$T_6 = T_5 + T_4 + 2T_3 + T_1$$

$$\therefore T_3 = \frac{T_6 - T_5 - T_4 - T_1}{2} = \frac{146 - 32 - 22 - 20}{2}$$

$= 36$ teeth

steps	Arm, 2	1, fixed	3	4, 5	6
step1	$+a$	$+a$	$+a$	$+a$	$+a$
step2	0	$+b$	$-b\frac{T_1}{T_3}$	$+b\frac{T_1}{T_4}$	$+b\frac{T_1 * T_5}{T_4 * T_6}$
total	a	$a+b$	$a-b\frac{T_1}{T_3}$	$a+b\frac{T_1}{T_4}$	$a+b\frac{T_1 * T_5}{T_4 * T_6}$

$\because N_2 = 680$ rpm cw; $\therefore a = 680$

$\because N_1 =$ zero (fixed gear); $\therefore a+b = 0$, $\therefore b = -a = -680$

$$\therefore N_3 = a - b\frac{T_1}{T_3} = 680 + 680\frac{20}{36} = 1737.8 \text{ rpm cw}$$

$$N_4 = N_5 = a + b\frac{T_1}{T_4} = 680 - 680\left(\frac{20}{22}\right) = 61.81 \text{ rpm cw}$$

and $$N_6 = a + b\frac{T_1 * T_5}{T_4 * T_6} = 680 - 680\frac{20 * 32}{22 * 146} = 544.5 \text{ rpm}$$

(5) cw

Q4/

AB = 60 mm
AD = 360 mm
BC = 400 mm
DC = 180 mm

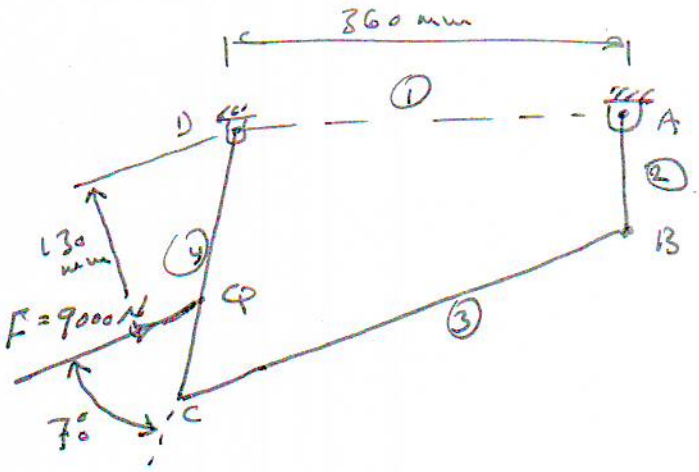

$T_{12} = ?$

Draw the force polygon for link 4

let $S_F = 0.01$ mm/N

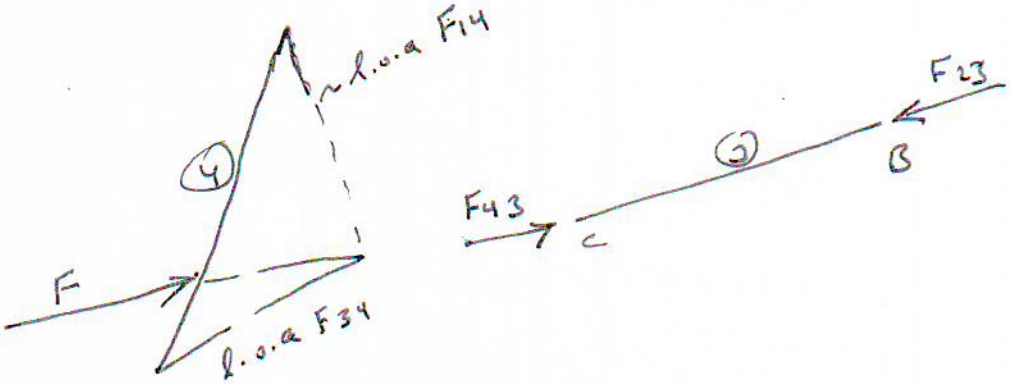

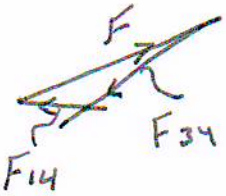

Force polygon for link 4

$S_F = 0.01$ mm/N

$\therefore F_{14} = 19.605/0.01 = 1960.5$ N

and $F_{34} = 71.304/0.01 = 7130.4$ N ←

$\therefore F_{43} = -F_{34} = -7130.4$ N →

and $F_{23} = -F_{43} = 7130.4$ ←

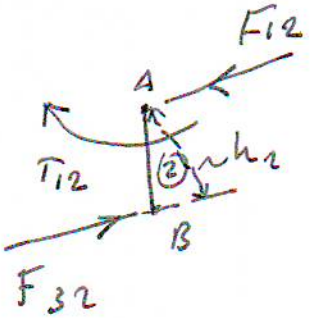

$\therefore T_{12} = F_{32} * h_2 = 7130.4 * 57.3$

$= 408571.92$ N mm

$= \underline{408.572}$ N m CW

Q5/

$$\omega = \frac{2\pi * 210}{60}$$

$$= 21.99 \text{ rad/s}$$

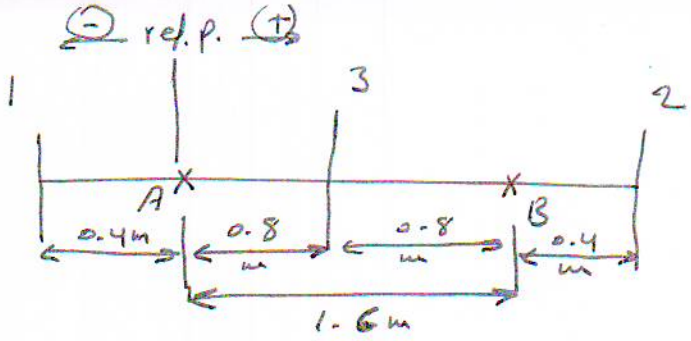

(6)

Planes	Masses M, kg	radius r, mm	Mr kg.mm	axial distance l, m	Mrl kg m mm
1	40	12	480	−0.4	−192
2	22	8	176	2.0	352
3	38	15	570	0.8	456
ref. p → A	—	—	R_A	0	0
B	—	—	R_B	1.6	1.6 R_B

∴ The pulleys are arranged in a manner that they give static balance. The force polygon for the three pulleys or masses must be drawing at the first as shown with a suitable scale (say, $S_F = 0.2$ mm/(kg.mm)).

assuming $\theta_1 = 0°$ relative to the (+X)

Take the upper triangle:

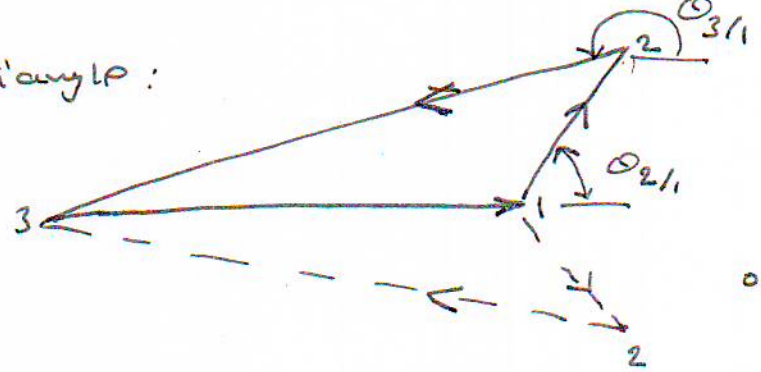

$\theta_1 = 0$

$\theta_{2/1} = 67.916°$

$\theta_{3/1} = 188.3°$

Now Draw the couple polygon for Column no. (6) as shown bellow with a suitable scale (say $S_{mm} = 0.2$ mm/(kg mm))

From the couple polygon

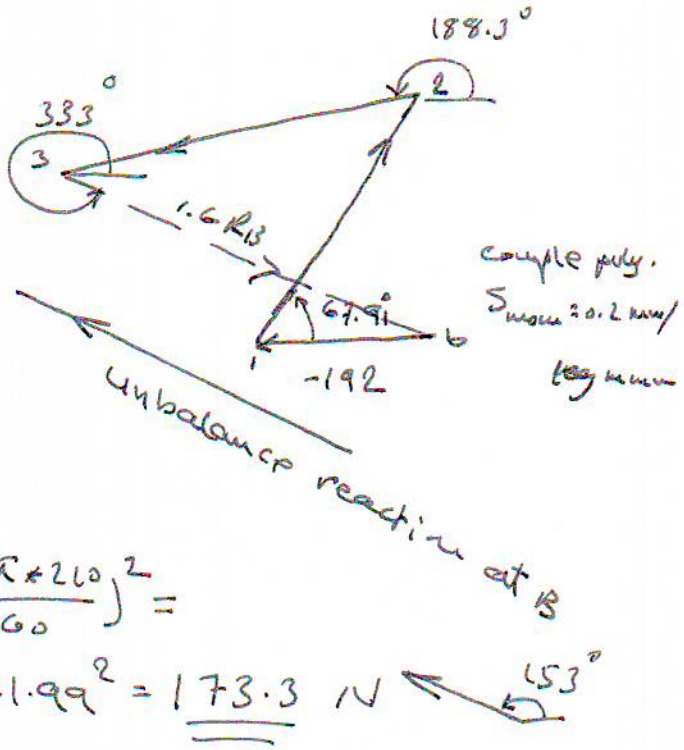

$$1.6 R_B = \frac{114.667}{0.2} = 573.335 \text{ kg mm}$$

$$\therefore R_B = 573.335/1.6 = 358.334 \text{ kg mm}$$

∴ The dynamic force developed on bearing B, $F_B = R_B * \omega^2$

$$= \frac{358.334}{1000} * \left(\frac{2\pi * 210}{60}\right)^2 =$$

$$= 0.358334 * 21.99^2 = \underline{173.3} \text{ N}$$

and The dynamic force developed on bearing A,

$$F_A = \underline{\underline{173.3}} \text{ N} \quad 27°$$

Q6/

dir. of motion ←

a)

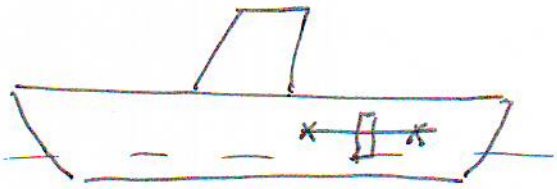

$l = 1.2\ m$

$M = 750\ kg$

$N_s = 5000\ rpm$, $\therefore \omega_s = \frac{2\pi * 5000}{60} = 523.6\ rad/s$

uniform disc, $D = 600\ mm$, $r = 300\ mm$

$\Phi = 10^\circ = 10 * \frac{\pi}{180} = 0.1745\ rad$

$t = 10\ sec.$

$\therefore \omega_1 = \frac{2\pi}{t} = 0.6283\ rad/s$

$\therefore \omega_{P_{max}} = \Phi * \omega_1 = 0.1745 * 0.6283 = 0.10966\ rad/s$

for a uniform disc

$$I = \frac{1}{2} M r^2 = \frac{1}{2} * 750 * 0.3^2 = 33.75\ kg\,m^2$$

$$T_{max} = I\, \omega_s * \omega_{P_{max}} = 33.75 * 0.10966 * 523.6 = 1937.9\ N.m$$

$T = F.l$

$\therefore F_{max} = T/l = 1937.9/1.2$

$\simeq 1615\ N$

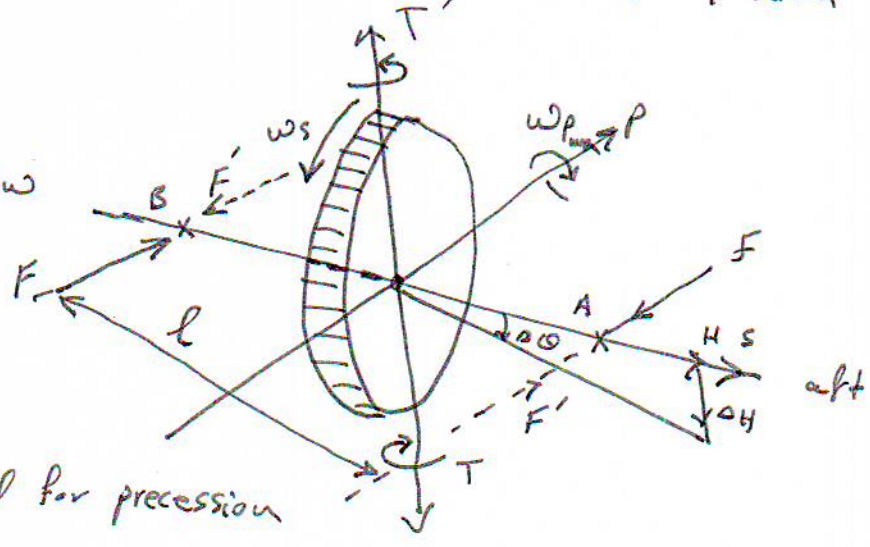

The applied couple (T) required for precession is cw viewed from above and the reaction (T') of the rotor on the ship is equal and opposite, i.e. ccw when viewed from above as shown in the figure. The ship therefore, yaws to port (left) looking forward.

Q6/

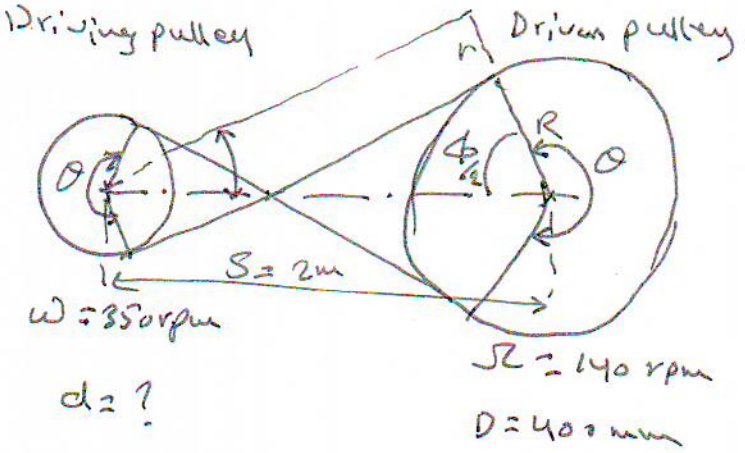

i)

$\omega = \frac{2\pi * 350}{60} = 36.652$ rad/s

$\mu = 0.3$

$n = 1$ belt

$\omega d = \Omega D$

$\therefore d = D \cdot \frac{\Omega}{\omega} = 400 * \frac{140}{350} = 160$ mm

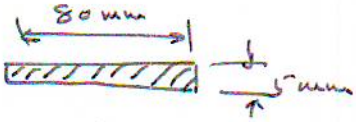

belt, c-section

① $\therefore r = d/2 = 80$ mm and $R = 200$ mm

② $\frac{\phi}{2} = \cos^{-1}\left(\frac{r+R}{s}\right) = \cos^{-1}\left(\frac{0.08+0.2}{2}\right) = 81.952°$

$\therefore \phi = 163.904°$

$\therefore \theta = 360° - \phi = 360° - 163.904° \approx 196.1° = 3.4225$ rad

$v = \omega \cdot r = 36.652 * 0.08 = 2.93216$ m/s

$T_1 = \sigma_{max} \cdot A = 1.5 * 5 * 80 = 600$ N

$\frac{T_1}{T_2} = e^{\mu\theta} = e^{0.3 * 3.4225} = 2.792$

$\therefore T_2 = T_1/2.792 = 600/2.792 = 214.9$ N

$\therefore$ max power $= (T_1 - T_2)\, v \cdot n = (600 - 214.9) * 2.93216 * 1$

$= 1129.175$ Watt $= \underline{\underline{1.129}}$ kW

③ $T_0 = \frac{T_1 + T_2}{2} = \frac{600 + 214.9}{2} = \underline{\underline{407.45}}$ N

* الحلول النموذجية لأسئلة مادة نظرية الآلات *

2016 - 2015 عام

الدور الأول

Q1/ given: $V_A = 2.45 \text{ m/s}$; $a_A = 1 \text{ m/s}^2$

required: ω_{AB} and α_{AB}.

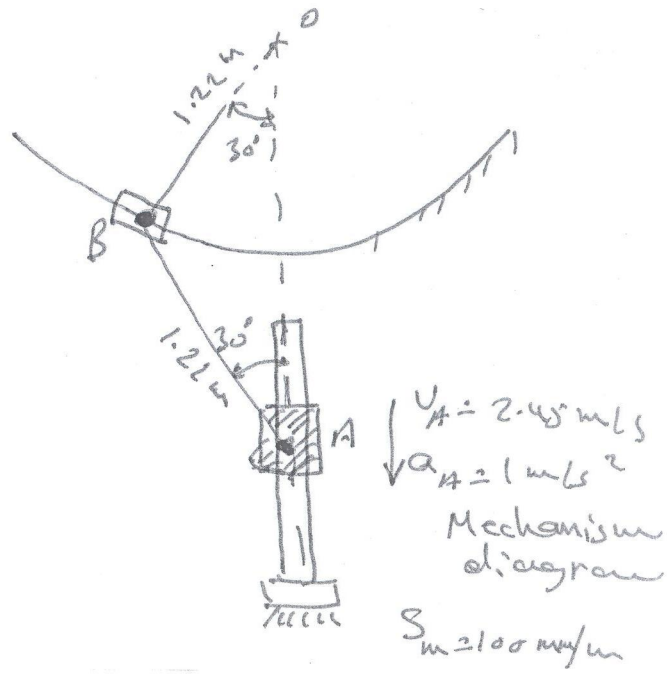

- Draw the velocity polygon with a suitable scale (say $S_v = 40 \text{ mm/(m/s)}$) as shown in the Figure.

From the velocity polygon:

$V_B = ^{ob}/_{S_v} = 2.45 \text{ m/s}$

and $V_{B/A} = ab/S_v = 2.45 \text{ m/s}$

$\therefore V_{B/A} = \omega_{AB} \cdot AB$

$\therefore \omega_{AB} = V_{B/A} / AB = 2.45/1.22 = 2.008 \text{ rad/s}$ (cw)

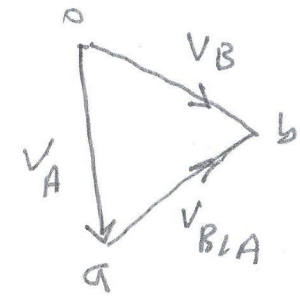

Velocity polygon

$S_v = 40 \text{ mm/(m/s)}$

$\vec{a}_B = \vec{a}_A + \vec{a}_{B/A}$

$a^n_B + a^t_B = a_A + a^n_{B/A} + a^t_{B/A}$

$a^n_B = \frac{V_B^2}{OB} = \frac{2.45^2}{1.22} = 4.92 \text{ m/s}^2$

a^t_B = unknown ($\perp$ OB)

$a_A = 1 \text{ m/s}^2 \downarrow$

$a^n_{B/A} = V^2_{B/A}/AB = 4.92 \text{ m/s}^2$

$a^t_{B/A}$ = unknown ($\perp$ link AB)

let $S_a = 20 \text{ mm/(m/s}^2)$

Now draw the acceleration polygon as shown:

From the acceleration polygon, we get

$$a^t_{B/A} = \frac{xb}{S_a} = 268.8338/20$$

$$= 13.44 \text{ m/s}^2$$

$\because a^t_{B/A} = \alpha_{AB} \cdot AB$

$\therefore \alpha_{AB} = a^t_{B/A} / AB$

$= 13.44 / 1.22 = 11.016$ rad/s^2 ↘

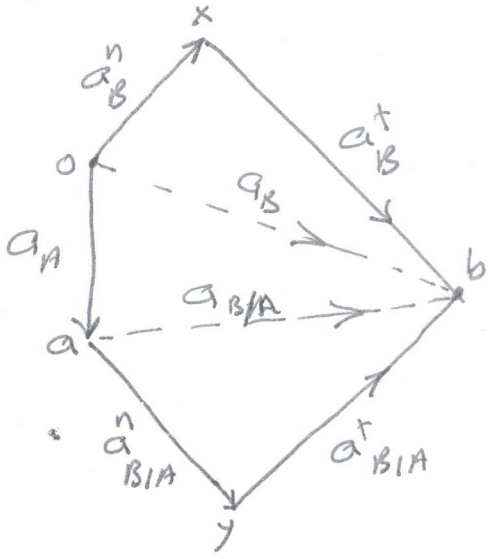

acceleration polygon

$S_a = 20 \text{ mm} / (\text{m/s}^2)$

Q2/ $N = 120$ rpm (constant) ccw

$AB = 75$ mm

$BC = 250$ mm

$CD = 150$ mm

$\theta = 90°$

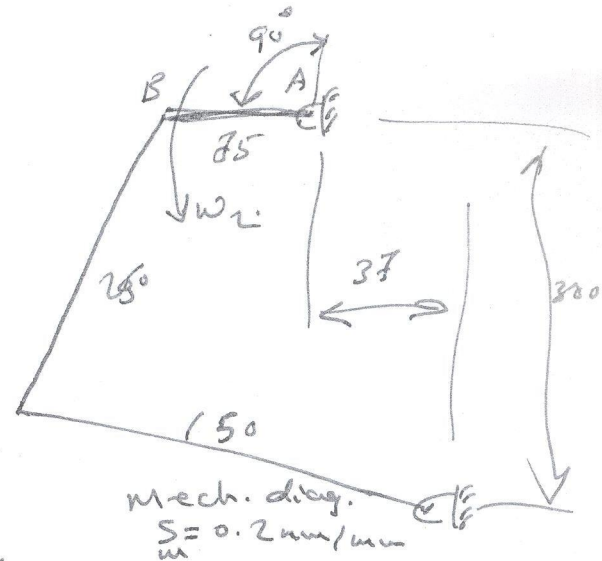

$V_B = \omega_2 \times AB = 12.566 * 75$

$= 942.48$ mm/s

- Draw the velocity polygon with a suitable scale (say $S_v = 0.1$ mm/(mm/s)) as show.

- From the velocity polygon

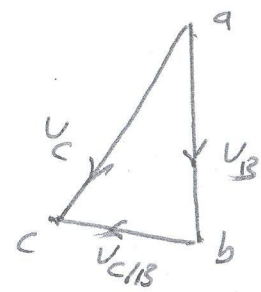

velocity polygon

$S_v = 0.1$ mm/(mm/s)

$V_c = ac / S_v = 96.291 / 0.1 = 962.91$ mm/s

$\therefore \omega_4 = V_c / DC = 962.91 / 150 = \underline{6.42}$ rad/s ↺ (ccw)

and $V_{CB} = cb / S_v = 33.39 / 0.1 = 333.9$ mm/s

$\vec{a_c} = \vec{a_B} + \vec{a_{CB}}$

$a_c^n + a_c^t = a_B^n + a_B^t + a_{CB}^n + a_{CB}^t$

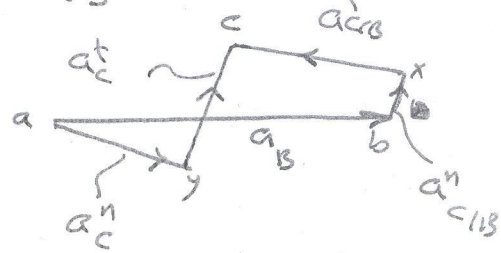

acceleration polygon

$S_a = 10$ mm/(m/s²)

$a_B^n = V_B^2 / AB = 942.48^2 / 75 = 11.843$ m/s²

a_B^t = zero (ω_2 = constant, i.e., $\alpha_2 = 0$)

$a_{CB}^n = V_{CB}^2 / CB = 333.9^2 / 250 = 0.4459$ m/s²

a_{CB}^t = unknown ($\perp$ link 3)

$a_C^n = V_C^2 / DC = 962.91^2 / 150 = 6.1813$ m/s²

a_C^t = unknown ($\perp$ link 4)

From the acceleration polygon

~~$a_c^t = 33.501/10 =$~~

$a_c^t = y_c / s_a = 33.501/10 = 3.3501 \text{ m/s}^2$

$\therefore \alpha_4 = \alpha_{CD} = a_c^t / c_D = 3.3501/0.15 = \underline{\underline{22.334}} \text{ rad/s}^2$ (cw)

Q3/

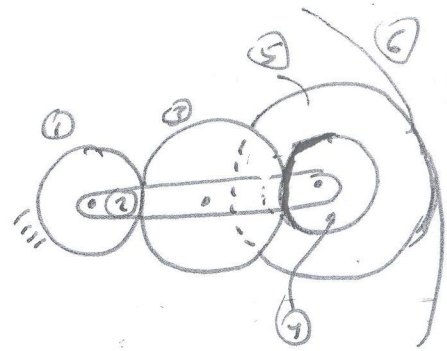

$T_1 = 20$ teeth

$T_4 = 22$ teeth

$T_5 = 32$ teeth

$T_6 = 146$ teeth

$N_2 = 680$ rpm cw

solution

$$T_6 = T_5 + T_4 + 2T_3 + T_1$$

$$\therefore T_3 = \frac{T_6 - T_5 - T_4 - T_1}{2} = \frac{146 - 32 - 22 - 20}{2}$$

$= 36$ teeth

steps	Arm, 2	1, fixed	3	4, 5	6
step1	$+a$	$+a$	$+a$	$+a$	$+a$
step2	0	$+b$	$-b\frac{T_1}{T_3}$	$+b\frac{T_1}{T_4}$	$+b\frac{T_1 * T_5}{T_4 * T_6}$
total	a	$a+b$	$a-b\frac{T_1}{T_3}$	$a+b\frac{T_1}{T_4}$	$a+b\frac{T_1 * T_5}{T_4 * T_6}$

$\because N_2 = 680$ rpm cw; $\therefore a = 680$

$\because N_1 =$ zero (fixed gear); $\therefore a+b = 0$, $\therefore b = -a = -680$

$$\therefore N_3 = a - b\frac{T_1}{T_3} = 680 + 680\frac{20}{36} = 1057.8 \text{ rpm cw}$$

$$N_4 = N_5 = a + b\frac{T_1}{T_4} = 680 - 680\left(\frac{20}{22}\right) = 61.81 \text{ rpm cw}$$

and $$N_6 = a + b\frac{T_1 * T_5}{T_4 * T_6} = 680 - 680\frac{20 * 32}{22 * 146} = 544.5 \text{ rpm cw}$$

(5)

Q4/

AB = 60 mm
BD = 360 mm
BC = 400 mm
DC = 180 mm

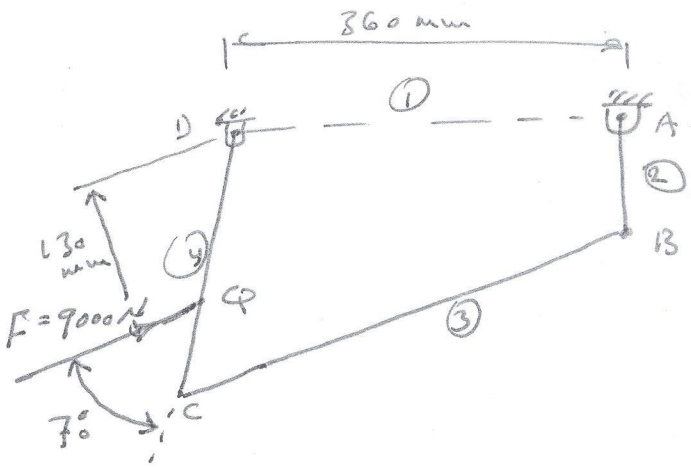

$T_{12} = ?$

Draw the force polygon for link 4

let $S_F = 0.01$ mm/N

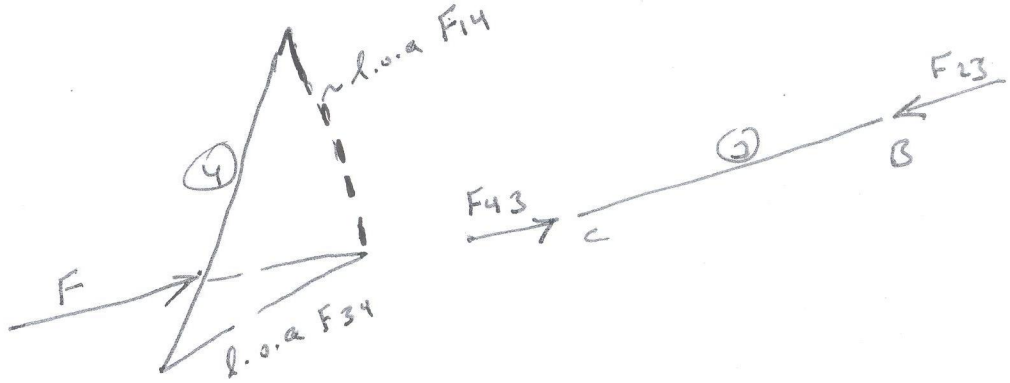

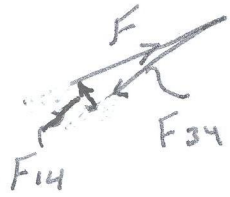

Force polygon for link 4

$S_F = 0.01$ mm/N

$\therefore F_{14} = 19.605 / 0.01 = 1960.5$ N

and $F_{34} = 71.304 / 0.01 = 7130.4$ N ↙

$\therefore F_{43} = -F_{34} = -7130.4$ N ↗

and $F_{23} = -F_{43} = 7130.4$ ↙

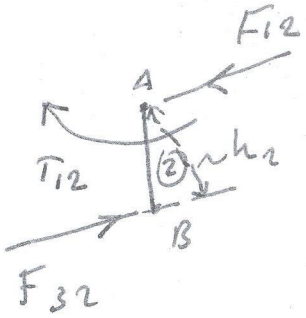

$\therefore T_{12} = F_{32} * h_2 = 7130.4 * 57.3$

$= 408571.92$ N mm

$= \underline{408.572}$ N m CW

Q5/

$$\omega = \frac{2\pi * 210}{60} = 21.99 \text{ rad/s}$$

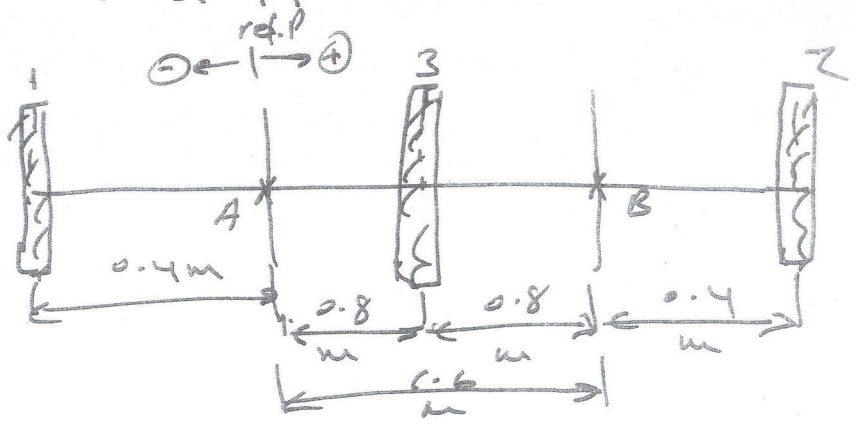

planes	Mass eq M_r kg	reading r, mm	Mr kg.mm	axial distance l, m	Mrl kg m mm
1	40	12	480	-0.4	-192
2	22	18	396	2.0	792
3	38	15	570	0.8	456
A	—	—	R_A	0	0
B	—	—	R_B	1.6	$1.6 R_B$

:P →

The pulleys are arranged in a manner that they give static balance. The force polygon for the three pulleys or masses might be drawing at first as shown below with a suitable scale (say, $S_F = 0.2$ mm/(kg mm))

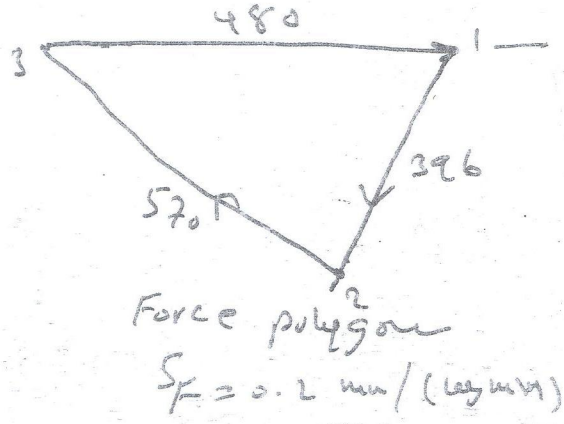

Force polygon

$S_F = 0.2$ mm/(kg mm)

or

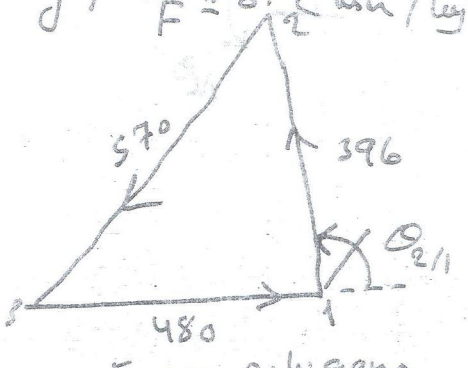

Force polygon

$S_F = 0.2$ mm/(kg mm)

Take the right Figure:

$\theta_1 = 0$; $\theta_{211} = 99.43°$ and $\theta_{311} = 263.26°$

∴ Know Draw the couple polygon for column no. (6) in the table above as shown in the Figure below with a suitable scale (say: $S_{mm} = 0.1 \text{ mm}/(\text{kg m mm})$)

From the couple polygon:

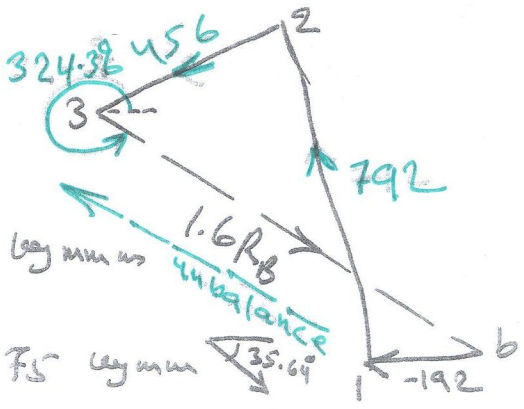

couple polygon
$S_{mm} = 0.1 \text{ mm}/(\text{kg mm})$

$$1.6R_B = \frac{80.46}{0.1} = 804.6 \text{ kg mm}$$

$$\therefore R_B = 804.6/1.6 = 502.875 \text{ kg mm}$$

- The dynamic force developed on bearing B is: $F_B = R_B \cdot \omega^2$

$$= 0.502875 * (21.99)^2 = \underline{\underline{243.17}} \text{ N}$$

and the dynamic force developed on bearing A is;

$F_A = 243.17$ N

(equal & opposite to thrust F_A on B)

Q6/

a)

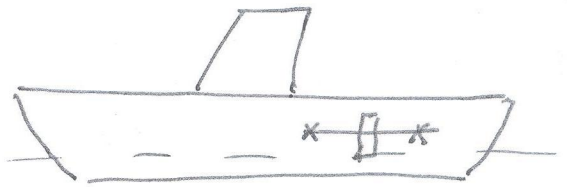

$l = 1.2$ m

$M = 750$ kg

$N_s = 5000$ rpm, $\therefore \omega_s = \frac{2\pi \times 5000}{60} = 523.6$ rad/s

uniform disc, $D = 600$ mm, $r = 300$ mm

$\phi = 10^\circ = 10 \times \frac{\pi}{180} = 0.1745$ rad

$t = 10$ sec.

$\therefore \omega_1 = \frac{2\pi}{t} = 0.6283$ rad/s

$\therefore \omega_{p_{max}} = \phi \times \omega_1 = 0.1745 \times 0.6283 = 0.10966$ rad/s

for a uniform disc

$$I = \frac{1}{2} M r^2 = \frac{1}{2} \times 750 \times 0.3^2 = 33.75 \text{ kg m}^2$$

$$T_{max} = I \omega_s \times \omega_{p_{max}} = 33.75 \times 0.10966 \times 523.6 = 1937.9 \text{ N.m}$$

$T = F \cdot l$

$\therefore F_{max} = T/l = 1937.9/1.2$

$\simeq 1615$ N

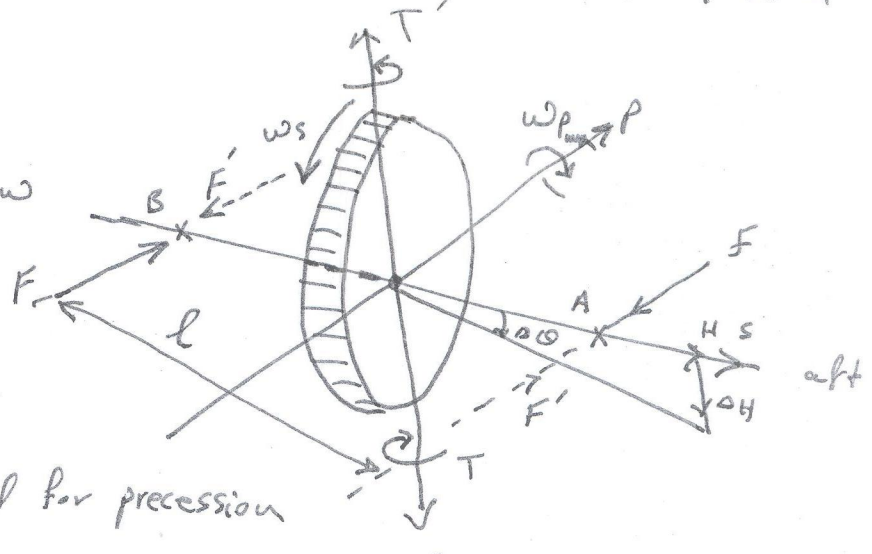

The applied couple (T) required for precession is cw viewed from above and the reaction (T') of the rotor on the ship is equal and opposite, i.e. ccw when viewed from above as shown in the figure. The ship therefore, yaws to port (left) looking forward.

Q6/

b)

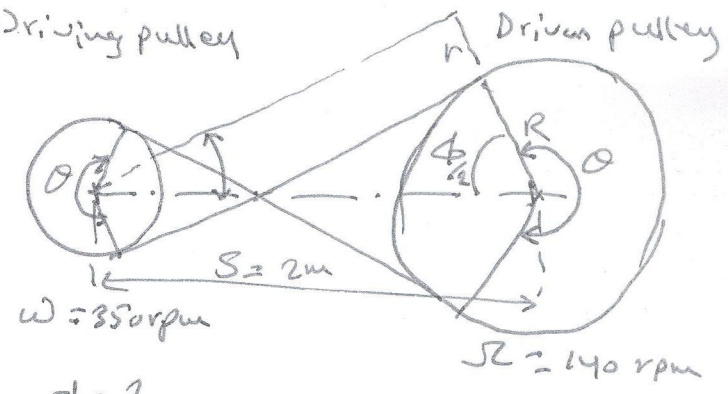

$$w = \frac{2\pi * 350}{60} = 36.652 \text{ rad/s}$$

$\mu = 0.3$

$n = 1$ belt

$wd = \Omega D$

$$\therefore d = D \cdot \frac{\Omega}{w} = 400 * \frac{140}{350} = 160 \text{ mm}$$

belt, c-section

① $\therefore r = d/2 = 80$ mm and $R = 200$ mm

② $$\frac{\phi}{2} = \cos^{-1}\left(\frac{r+R}{s}\right) = \cos^{-1}\left(\frac{0.08+0.2}{2}\right) = 81.952^\circ$$

$$\therefore \phi = 163.904^\circ$$

$$\therefore \theta = 360^\circ - \phi = 360^\circ - 163.904^\circ \approx 196.1^\circ = 3.4225 \text{ rad}$$

$$v = w \cdot r = 36.652 * 0.08 = 2.93216 \text{ m/s}$$

$$T_1 = \sigma_{max} \cdot A = 1.5 * 5 * 80 = 600 \text{ N}$$

$$\frac{T_1}{T_2} = e^{\mu\theta} = e^{0.3 * 3.4225} = 2.792$$

$$\therefore T_2 = T_1/2.792 = 600/2.792 = 214.9 \text{ N}$$

$$\therefore \text{max power} = (T_1 - T_2)\, v \cdot n = (600 - 214.9) * 2.93216 * 1$$

$$= 1129.175 \text{ Watt} = \underline{\underline{1.129 \text{ KW}}}$$

③ $$T_0 = \frac{T_1 + T_2}{2} = \frac{600 + 214.9}{2} = \underline{\underline{407.45 \text{ N}}}$$

University of Technology
Department of Mechanical Engineering
Final Examination 2014/2015

Subject :Theory of Machines | **Year: 3 year**
Division :All | **Exam Time: 3Hrs.**
Examiners: Dr.Nabil N.& Dr. Ibtissam M. | **Date: 31 / 5/ 2015**

ملاحظة: اجب عن خمسة اسئلة فقط على ان يكون السؤال الاول من ضمنها

Q1) In the mechanism shown in Figure 1, the gear Y has a PCD of 160 mm and rotates uniformly about the fixed center P with 10 rad/s CCW. The gear Z, which has a PCD of 80 mm, meshes with gear Y and rotates about the fixed center Q. The link BD, which is 160 mm long, is pinned to the gear Y at B, the distance of B from P being 60 mm. The link CD, which is also 160 mm long, is pinned to gear Z at C, the distance of C from Q being 30 mm. The links BD and CD are pinned together at D also to the end D of link DE, which is 200 mm long. The end E of this link DE is pinned to a slider, which is constrained to move along a vertical path.
IF $V_{E/D}$ = 612.3 mm/s, $V_{D/C}$ = 756.6 mm/s and $V_{D/B}$ = 447.6 mm/s. Draw the acceleration diagram and then determine the magnitude and direction of a_E, α_{ED}, α_{DC} and α_{DB}. (20 Marks)

Q2) Figure 2 shows a gear train containing both compound-reverted and epicyclic stages. Tooth numbers are in figure. The motor is driven ccw at 1750 rpm. Find the speeds of shafts 1 and 2. (20 Marks)

Q3) A, B, C and D are four masses carried by a rotating shaft at radii 100, 125, 200 and 150 mm respectively. The planes in which the masses revolve are spaced 600 mm apart and the mass of B, C and D are 10kg, 5kg and 4kg respectively. Find the required mass (A) and the relative angular settings of the four masses so that the shaft shall be in complete balance. (20 Marks)

Q4) An airplane makes a complete half circle of 50 m radius, towards left, when flying at 200 km/hr. The rotary engine and propeller of the plane have a mass of 400 kg and a radius of gyration of 0.3 m. The engine rotates at 2400 r.p.m clockwise when viewed from the rear. Find the gyroscopic couple on the airplane and its effect on it. What will be the effect if the airplane turns towards right instead of left? (20 Marks)

Q5) In the mechanism shown in Figure 3, the clockwise torque applied to DC resists a vertical force of 50 N at F. The links AB = 60mm, BC = 180mm and CD = 30mm. Determine the magnitude and direction of the force and torque acting on the mechanism at point D. (20 Marks)

Q6) Answer either (a) or (b): (20 Marks)

a) Two involutes gears of 17.5° pressure angle are in mesh. The number of teeth on pinion is 22 and on wheel is 42. The gears have a pitch of 16. What is the maximum addendum diameter of the gear to avoid undercutting (interference) of the pinion teeth? Also determine the contact ratio.

b) Power is transmitted from a shaft rotating at 260 rev/min by 8 ropes running in grooves of a wheel of effective diameter 1.5 m to the center line of the rope. The groove angle is 50°, and arc of contact round the wheel rim is 180°. The maximum permissible tension in each rope is 800N and its mass is 0.5 kg/m. If the coefficient of friction between the rope and wheel surface is 0.3, what power can be transmitted under the above condition.

Good Luck

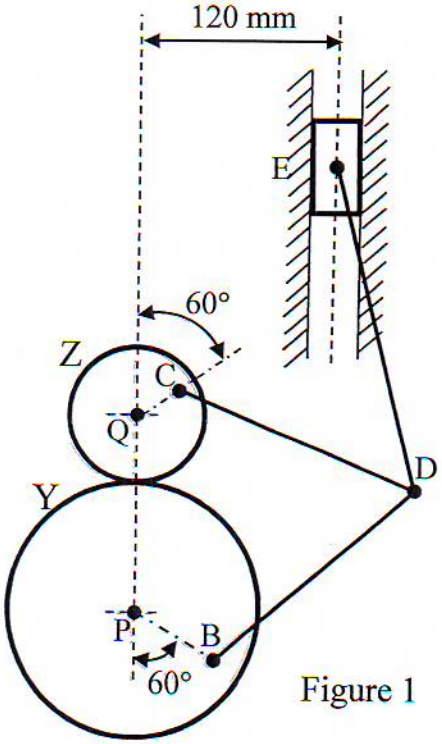

Figure 1

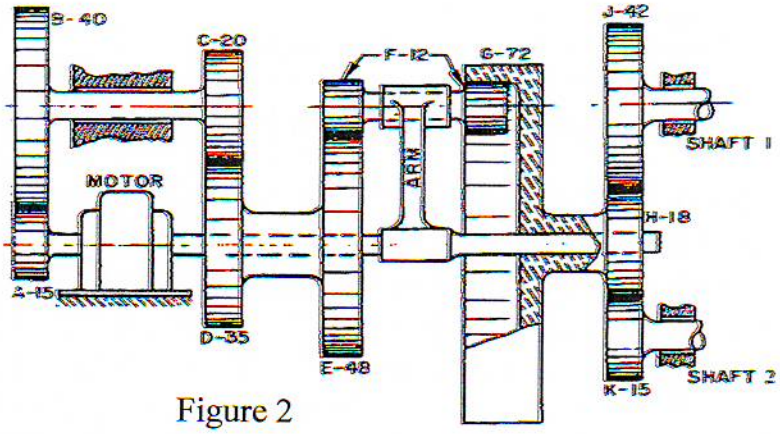

Figure 2

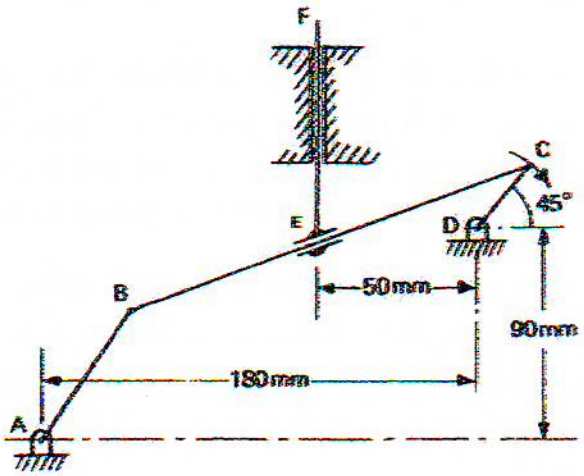

Figure 3

UNIVERSITY OF TECHNOLOGY
Machines & Equipment Eng. Department
Final Examination

Subject: *Theory of machines*
Class: *3rd year (all branches)*
Examiners: ***Dr. Nabil Noor & Dr. Ibtissam Mahdi***

Date: *31 /05/2014*
Time: *3 hrs*

(Answer all questions)

Q 1) Figure 1 shows the mechanism of a variable-stroke pump. The drive is taken from the crank OA to the pin B on the connecting rod CBD. The end C of the connecting rod carries a slider which is free to move along the curve link EFG. The stroke of the pump may be varied by rotating the link EFG about the fixed pivot G, although during operation of EFG is fixed. If the crank OA rotates cw at 120 rpm, find the velocity of the piston D and slider C for the position shown in the figure, given the following: OA = 80 mm, Length of connecting rod DC = 400 mm, DB = 300 mm. In the given position, D and A are on the same horizontal line. (20 Marks)

Q2) A shaft is supported in two bearings 3m a part and projects 0.5m beyond the bearings at each end. The shaft caries three pulleys, one at each end and one at the middle of its length. The end pulleys have masses of 90kg and 48kg and their centers of gravity are at 4mm and 5mm respectively from the shaft axis. The center pulley has a mass of 70kg and its center of gravity is 6mm from the shaft axis. If the pulleys are arranged so as to give static balance, determine the dynamic forces produced on the bearings when the shaft rotates at 300 rpm. Also determine the angular positions of all forces acting on the shaft. (20 Marks)

Q3) Figure 2 shows an epicyclic gear in which the internally-toothed annulus A is fixed. Wheels B and G are free to rotate on the arm. Wheels F and H are keyed to shafts D and E respectively. The numbers of teeth in the gear wheels are as follows:

A = 120, H = 50, B = 30, F = 50, G = 30

If D is driven at 80 r/min and C is driven at 50 r/min in the same direction, find the speed and direction of rotation of the arm and of the shaft E. (20 Marks)

(20 Marks)

Q4) **Answer either (a) or (b):**

a) An open belt drive connects two pulleys, 1.2m and 0.5m diameter, on parallel shafts 3.6m apart. The belt has a mass of 0.8 kg/m length, and the maximum tension in it is not to exceed 3kN. If the 1.2m pulley which is the driver, run at 400 rpm, calculate the torque on each of the two shafts, and the power transmitted.

b) A pinion having 24 involute teeth of (5) module rotates at (240) rev/min and transmits (1.6 kW) to a gear wheel having 60 teeth. The addendum on both wheels is (1/4) of the circular pitch and the pressure angle is (20°).

Find (i) the arc of contact, (ii) the normal force between the teeth at an instant when there is only one pair of teeth in contact.

Q5) Disc having mass of 110kg with radius of gyration of 40cm is supported between two bearings on a shaft of negligible weight. The center line of the shaft, disc and the bearing lie in a horizontal plane. The distance of the disc from bearings are 40cm to the right from left side bearing and 60cm to the left from the right side bearing. These bearings are supported by vertical thin cords. When disc is rotating at 98.1rad/sec in clockwise direction looking from the right hand side bearing, the cord supporting the right hand side bearing gets broken, discuss the motion of the disc at the instant the cord is cut. (20 Marks)

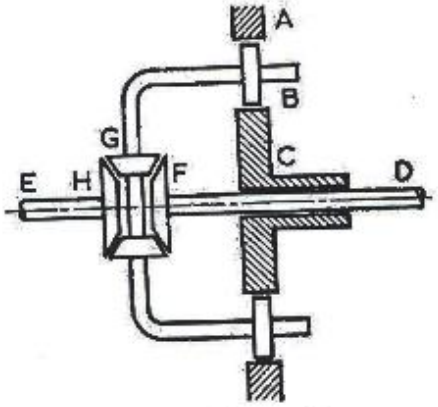

Figure 2

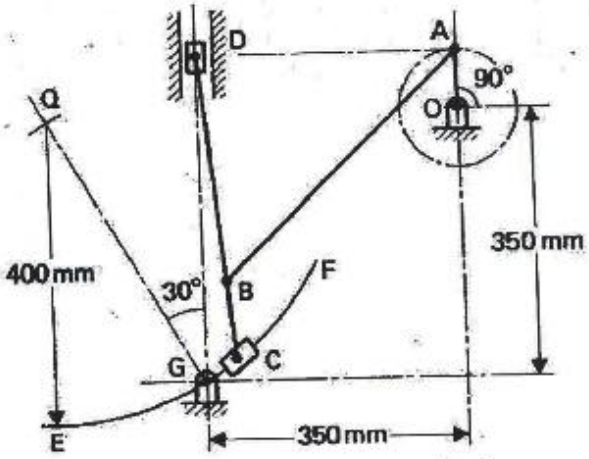

Figure 1

Good Luck

UNIVERSITY OF TECHNOLOGY
Machines & Equipment Eng. Department
Final Examination 2012-2013

Subject: Theory of Machines
Branch: All
Examiners: Dr. Nabil N. & Dr. Ibtissam M.

Class: 3rd year
Time: 3 hrs.
Date: 08/06/2013

ملاحظة: اجب عن خمسة اسئلة فقط على ان يكون السؤال الاول من ضمنها

Q1) Figure 1 shows a gear train containing both compound-reverted and epicyclic stages. Tooth numbers are in figure. The motor is driven ccw at 1750 rpm. Find the speeds of shafts 1 and 2.

(20 Marks)

Q2) In Figure 2, the mass of link AG_3B is 1 kg and the moment of inertia of the link with respect to the center of mass G_3 is 0.09 kg m^2. If the link is in motion with the following parameters, determine the magnitude and direction of the total force at point A.
Parameters: AB = 203 mm, AG_3 = 80 mm, a_{G3} = 248 m/s^2 @ ∠-60°, α_3 = 113 rad/s^2 ccw, P = 150 N.

(20 Marks)

Q3) For the phase shown of the mechanism of Figure 3, construct the velocity polygon and determine $V_{A/C}$, ω_3 and ω_2. Take: O2A = 75 mm, AB = 175 mm, CD = 300 mm, CB = 150 mm.

(20 Marks)

Q4) The turbine on a ship, Figure 4, has a mass of 400 kg and is mounted on bearings A and B as shown. Its center of mass is at G, its radius of gyration is k_z = 0.3 m, and $k_x = k_y$ = 0.5 m. If it is spinning at 200 rad/s, determine the vertical reactions at the bearings when the ship undergoes each of the following motions: a) rolling, with ω_1 = 0.2 rad/s, b) turning, with ω_2 = 0.8 rad/s, c) pitching, with ω_3 = 1.4 rad/s.

(20 Marks)

Q5) Figure 5 shows a system with three weights on a rotating shaft. W_1 = 40 N @ 90° at a 101.6 mm radius, W_2 = 40 N @ 225° at a 152.4 mm radius, and W_3 = 27 N @ 315° at a 254 mm radius. Determine the magnitudes and angular positions of the balance weights needed to dynamically balance the system. The balance weights in planes 4 and 5 are placed at a 76.2 mm radius.

(20 Marks)

Q6): Answer either (a) or (b):

a) Two shafts whose centers are 1.5 m apart are connected by an open V-belt drive. The driving pulley is supplied with 110 kW and has an effective diameter of 310 mm. It runs at 1000 rpm while the driven pulley runs at 380 rpm. The angle of groove on the pulleys is 45°. The maximum permissible safe stress in the material is 2.2 MPa and the cross sectional area of each belt is 450 mm^2. The coefficient of friction is 0.29. Estimate the number of belts required.

(20 Marks)

b) Find the gear ratio, circular pitch, base circle diameter, pitch circle, center distance, addendum, dedendum, whole depth, outside diameter and the maximum number of pairs in contact of a gearset with a given parameters: module = 4 mm, 20° pressure angle, 19-tooth pinion is meshed externally with a 37-tooth gear.

(20 Marks)

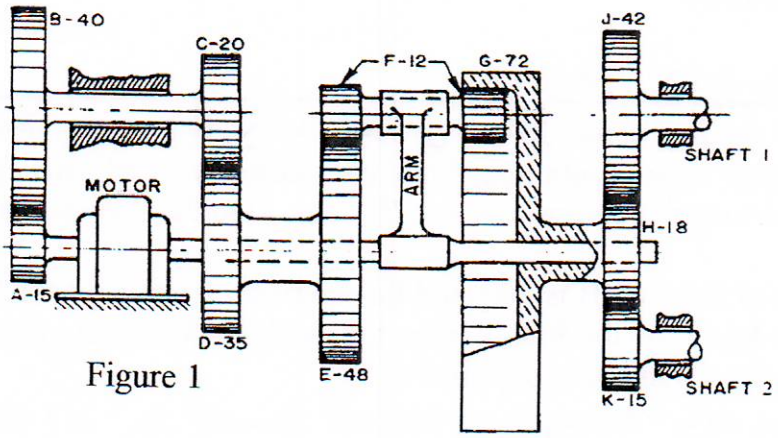

Figure 1

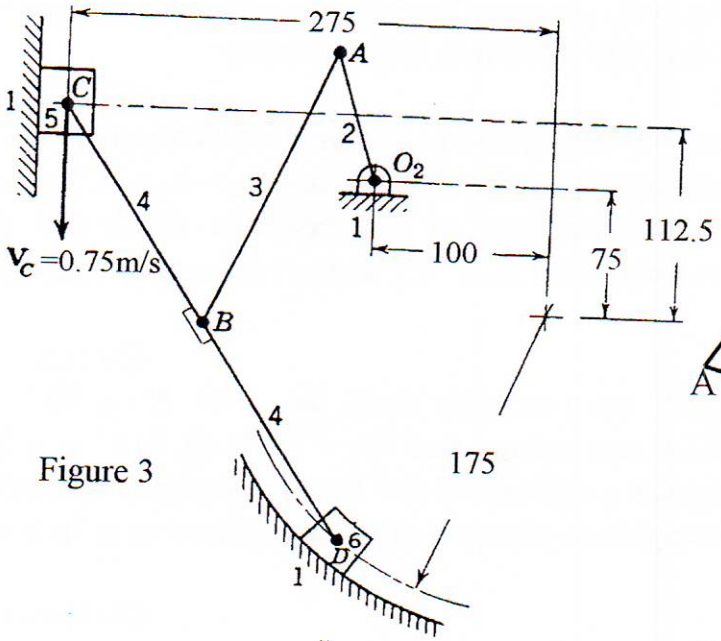

Figure 3

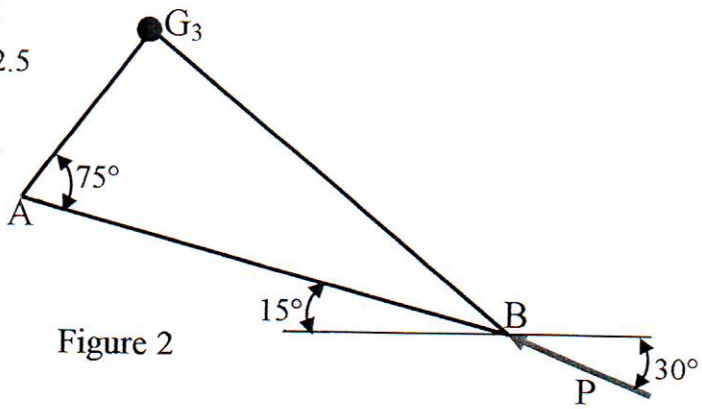

Figure 2

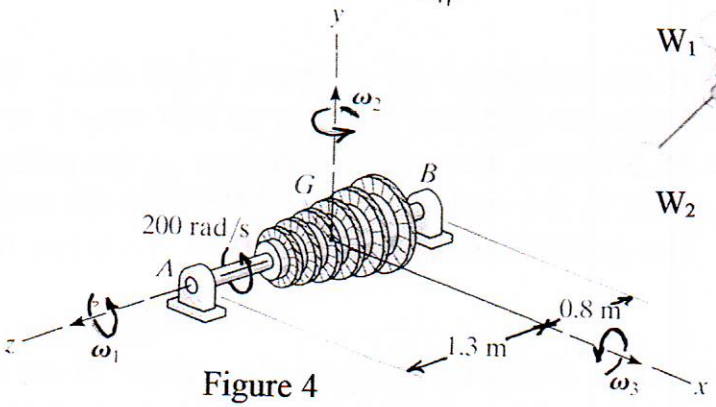

Figure 4

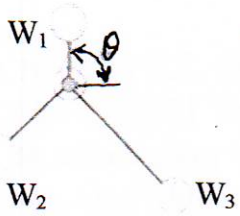

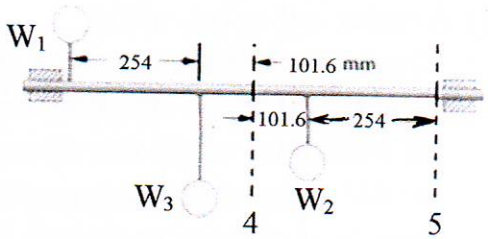

Figure 5

Good luck

UNIVERSITY OF TECHNOLOGY
Machines & Equipment Eng. Department
First Semester Examination 2012-2013

Subject: Theory of Machines
Branch: All
Examiners: Dr. Ibtissam M. & Dr. Nabil N.

Class: 3rd year
Time: 1½ hour
Date: 20 /01/2013

Q1) On the mechanism shown in Figure 1, link 4 slides on link 1, and link 3 slides on link 4 around the circle arc. Link 2 is pinned to links 1 and 3 as shown. Determine the velocity and acceleration of link 4. Take: r = 25 mm, AP = 19 mm, AC = 10 mm, ω_2 = 10 rad/s (cw), α_2 = 100 rad/s^2 (cw).

Q2) A four links mechanism shown in Figure 2: AB = 400 mm, BC = 600 mm, CD = 640 mm, CE = 200 mm and AD = 300 mm is acted by force of 60 N on the link ED at E. Determine the torque on the link AB.

Answer one of the following:

Q3) Two mating gears with module pitch of 6mm have 20 and 48 teeth of 20° pressure angle and 6mm addendum. Determine the number of pairs of teeth in contact and the angle turned through by the larger wheels for one pair of teeth in contact.

Q4) Two 20° involute spur gear mesh externally and give a velocity ratio of 3, module is 3 mm and the largest gear rotates at 120 rpm, determine:

i) The minimum number of teeth on gear and pinion.
ii) Number of pairs of teeth in contact.

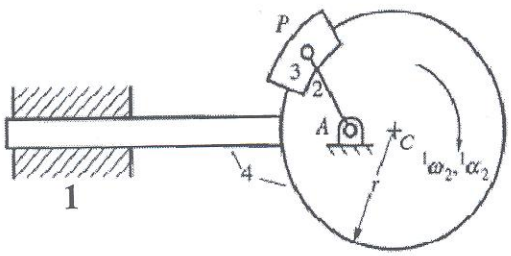

Figure 1

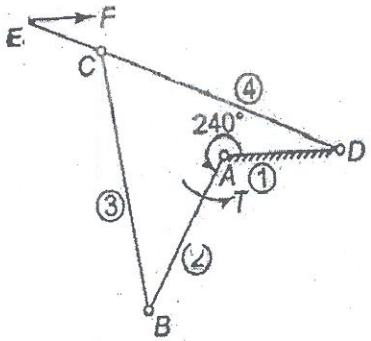

Figure 2

Good Luck

UNIVERSITY OF TECHNOLOGY
Machines & Equipment Eng. Department
Final Examination 2011-2012

Subject: Theory of Machines
Branch: All
Examiners: Dr. Nabil N. & Dr. Ibtissam M.

Class: 3rd year
Time: 3 hours
Date: 31/05/2012

Q1/ Figure 1 shows a circular eccentric 100 mm in diameter. It is rotating about center O which is offset by 25 mm from the center of the eccentric. When angle AOC = 60° the cam rotates with a uniform angular velocity of 10 rad/sec. Determine the velocity and acceleration of A with respect to B, and B with respect C. ***(20 Marks)***

Q2/ In the mechanism shown in Figure 2, determine the resisting torque on link 2 (T_{12}) required for equilibrium. Link 2 rotates ccw. ***(20 Marks)***

Q3/ If, in the planetary gear train shown in Figure 3, gear 1 rotates at + 1100 rpm. Determine the speed and direction of rotation of the annulus 6, and of the arm, for the following conditions:

a) If gear 2 is held fixed,
b) If gear 2 rotates at – 600 rpm.

All gears are of the same pitch. ***(20 Marks)***

Q4/ The camshaft of a high-speed pump consists of a parallel shaft 25 mm diameter, and 480 mm long. It carries 3 eccentrics, each of diameter 60 mm and with a uniform thickness of 18 mm. The assembly is symmetrical, as shown in Figure 4, and the two bearings are at A and B. The angle between the eccentrics is 120° and the eccentricity of each is 12.5 mm. The material density is 7000 kg/m^3, and the speed of rotation is 1430 rev/min. Find the dynamic load on each bearing due to the out-of-balance couple. ***(20 Marks)***

Answer <u>one</u> of the following questions:

Q5/

a) The tension in a pulley belt is 110 N when stationary. Calculate the tension in each side and the power transmitted when the belt is on the point of slipping on the smaller wheel. The wheel is 250 mm diameter and the coefficient of friction is 0.32. The angle of lap is 165°. The wheel speed is 1500 rpm. ***(10 Marks)***

b) Two standard gears in mesh such that one gear has 20 teeth and the other has 30. The module for each gear is 6.25, and the working pressure angle is 20°. Determine the maximum contact ratio. ***(10 Marks)***

Q6/ The car shown in Figure 5, is traveling at V_C = 100 km/h around the horizontal curve having a radius of 80 m. If each wheel has a mass of 16 kg, a radius of gyration 300 mm about its spinning axis, and a radius of 400 mm. Determine the difference between the normal forces of the rear wheels, caused by the gyroscopic effect. The distance between the wheels is 1.3 m. ***(20 Marks)***

Good Luck

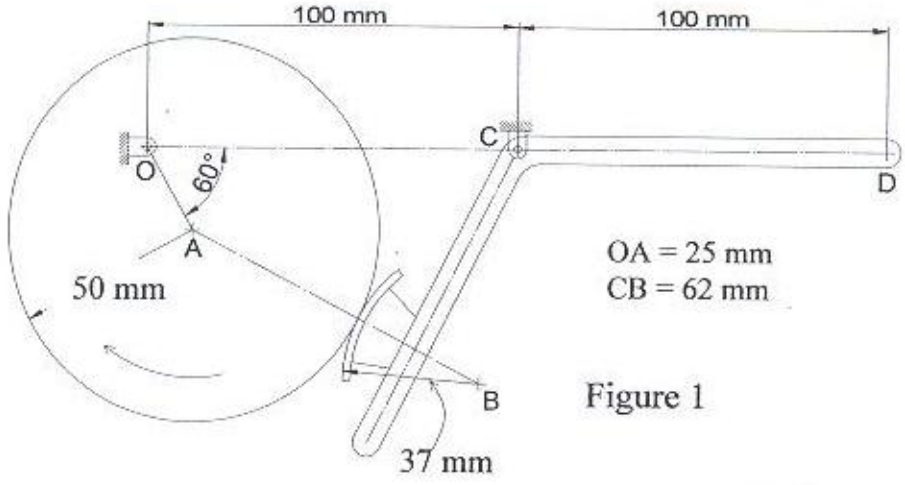

Figure 1

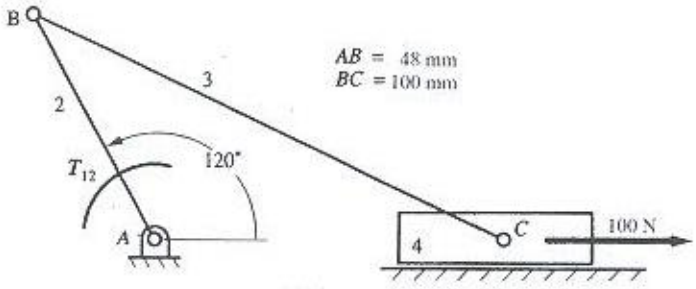

Figure 2

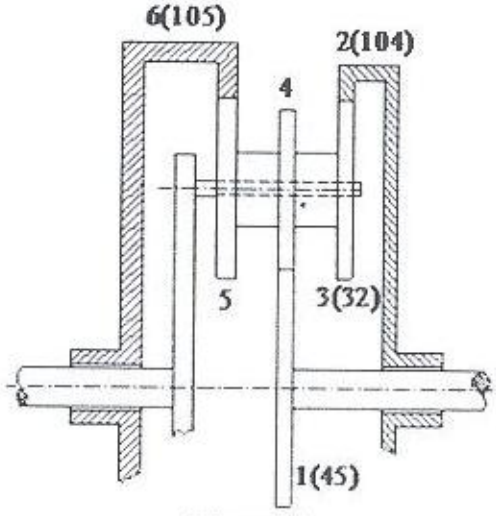

Figure 3

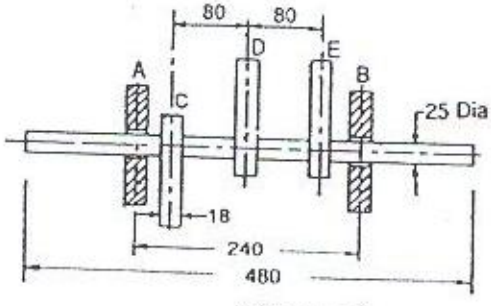

Figure 4

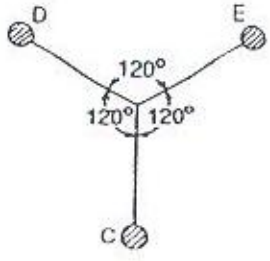

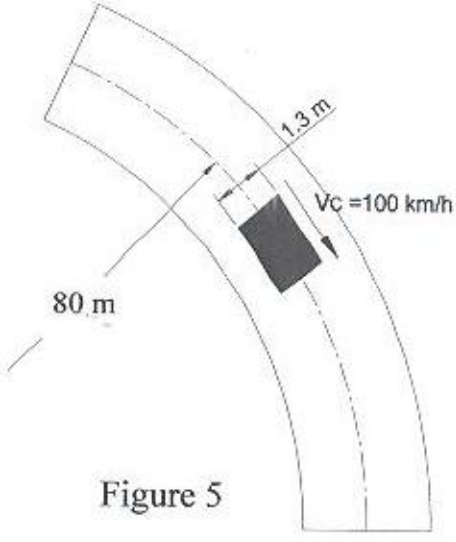

Figure 5

CANON Canon 0000001

UNIVERSITY OF TECHNOLOGY
MECHANICAL ENGINEERING DEPARTMENT
Supplementary Examination

Subject: Theory of Machines, 3rd year — Date: 18 /09/2011
Examiner(s): Dr. Hassan , Dr. Nabil N. S. — Time: 3 hrs

Q1: a) In the slider-crank mechanism shown in Figure 1, the crank rotates at a uniform angular velocity of 10 rad/s cw. For the configuration shown, determine the magnitudes and directions of ω_3, V_B, $V_{B/A}$, α_3, $a_{B/A}$ and a_B. Take: $O_2A = 76$ mm and $AB = 203$ mm.

b) In Figure 2, link 2 rotates about the fixed axis at O_2. Determine all forces that produce the motion of the link. Take: $M_2 = 8$ kg, $I_{G2} = 0.02$ kg m^2.

Q2: Figure 3 shows three masses connected to a rotating shaft and mounted outside of the bearings A and B. If the shaft rotates at 150 rpm, using the balancing of rotating masses method, determine the magnitudes and directions of the bearing reactions at A and B. Assuming that M_1 is vertical and above the shaft and the angles of M_2 and M_3 are 125° and 210° respectively ccw relative to M_1.

Q3: Figure 4 shows a gear train in which gears D-E and F-G are compound gears. D gears with A and B; E gears with C. If the wheel A is fixed and the arm makes 20 rpm cw, find the revolutions of B and C.
If the arm is applied a turning moment of 1 kN.m, determine the turning moment on the shaft supporting the wheel C.

Answer only one of the following:

Q4: Two involute gears in a mesh have a module of 6 mm and a pressure angle of 20°. The larger gear has 56 teeth and the gear ratio is 1/2. If the addenda on pinion and gear wheels are equal to one module, find the

i) Angle of action of the pinion and the gear wheel
ii) Maximum sliding velocity when the pinion rotates at 130 rpm

Q5: Power is transmitted between two shafts, 5 m apart, by an crossed wire rope passing round two pulleys, of 3 m and 2 m diameter respectively, the groove angle being 40°. If the rope has a mass of 4 kg/m, and the maximum working tension is 20 kN, determine the maximum power that the rope can transmit, and the corresponding speed of the smaller pulley. $\mu = 0.3$.

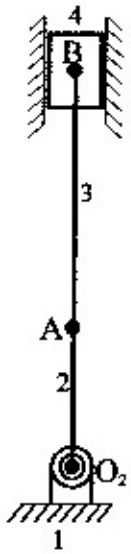

Figure 1

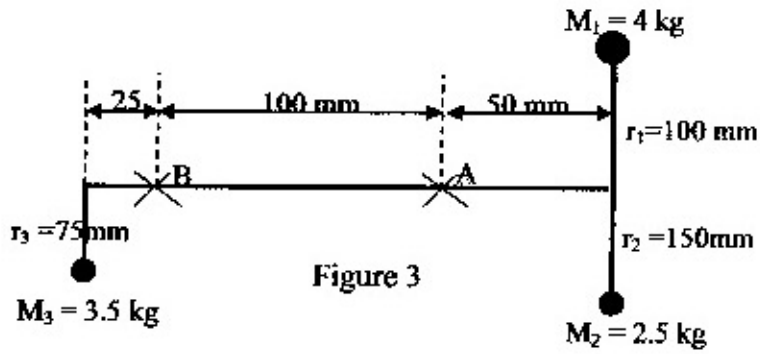

Figure 3

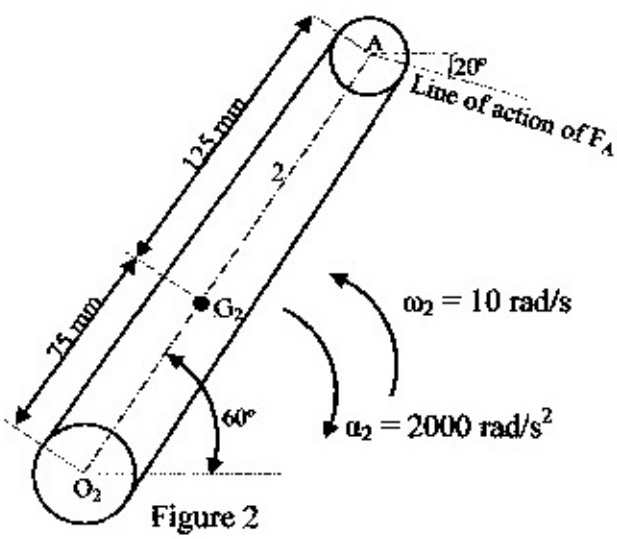

Figure 2

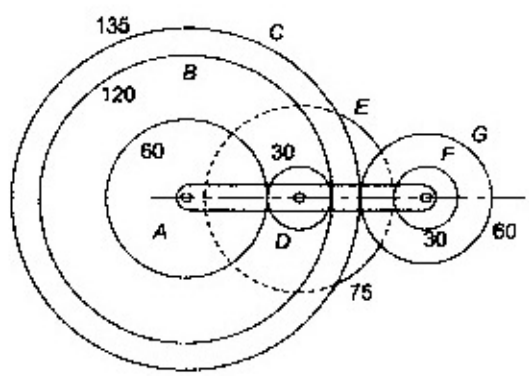

Figure 4

CANON canon 00000009

UNIVERSITY OF TECHNOLOGY
MECHANICAL ENGINEERING DEPARTMENT
Final Examination

(Answer only five questions)

Subject: *Theory of machines*
Class: *3rd year Mechanical Eng. (All)*

Date: *10/6/2007*
Time: *3 hrs*
Dr. *NABIL NOOR*

Q1: In the mechanism shown in Figure 1, the crank AB rotates in ccw direction at a uniform speed of 240 rpm. The crank length AB is 100 mm while the lengths of BC and BD are respectively 400 mm and 500 mm. Determine, for the position shown, the instantaneous difference in the velocity of C as compared with that of D and the instantaneous difference in the acceleration of C as compared with that of D.

(15 marks)

Q2: In the link ABC in Figure 2, AB = 600 mm, BC = 225 mm. A and B are attached by pin joints to the sliding blocks. If, for the position where BD = 375 mm, A is sliding towards D with a velocity of 6 m/s and a retardation of 150 m/s^2, find the acceleration of C and the angular acceleration of the link.

(15 marks)

Q3: Two gears of 3 module and of 20° pressure angle, each having 100 teeth, are in mesh together. Determine the addendum length necessary if the contact ratio is to be 2.0. How much greater is the addendum length than that of a standard tooth of the same pitch?

(15 marks)

Q4: Construct the displacement diagram for the specifications given below, using 15° intervals along θ axis for all types of motion:

1. Rise 60 mm in 90° (cycloidal motion)
2. Dwell 30°
3. Fall 30 mm in 90° (modified uniform-velocity motion-arc method)
4. Dwell 30°
5. Fall 30 mm in 120° (SHM)

(15 marks)

Q5: Answer (a) or (b):

(a) A cone clutch is required to transmit 30 kW at 1200 rpm. The mean diameter of the bearing surface is 250 mm and the cone angle is 25°. Assuming $\mu = 0.3$ and a normal pressure of 140 kN/m^2, determine the axial width of the conical bearing surface and the axial load required. *(15 marks)*

(b) Power is transmitted from an electric motor to a machine tool by an open belt drive. The effective diameter of the pulley on the motor shaft is 150 mm while that on the machine tool is 200 mm with a center distance of 600 mm. If the motor speed is 1440 rpm and the maximum permissible belt tension is 900 N, then the maximum power transmissible is 6 kW.

It is required to increase the power to be 6.75 kW, using the same pulleys, center distance and motor speed. The belt is treated with a special preparation that increases its coefficient of friction by 10% of its existing value, and addition an idler pulley may be fitted. Determine:

i. the existing coefficient of friction
ii. the new angle of lap. *(15 marks)*

Q6: Four pulleys A, B, C, D, are mounted on a shaft and have the following specifications:

Pulley	Mass (kg)	R (mm)
A	500	7.5
B	750	6 at 30° to A
C	750	6 at 90° to A
D	500	4.5 at 150° to A

This shaft is carried in bearings at E and F, the pulleys and bearings being situated so that the axial distances along the shaft are AB = +0.6 m, AC = +0.9 m, AD = +1.5 m, AE = +0.3 m, AF = +1.2 m.

If the system rotates at 300 rpm, determine the magnitude of the bearing reactions arising from the lack of balance, and the direction of these reactions relative to the out-of balance force from pulley A.

(15 marks)

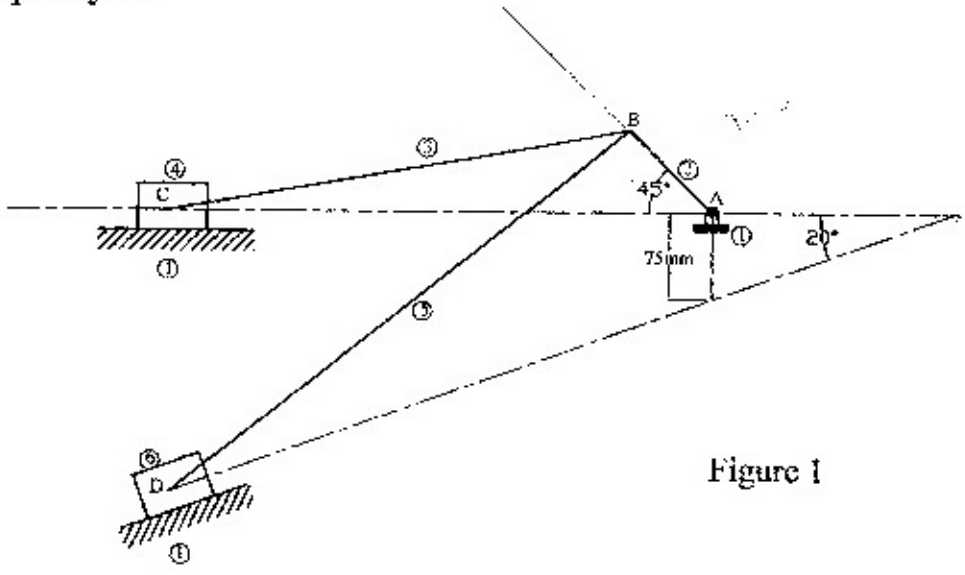

Figure 1

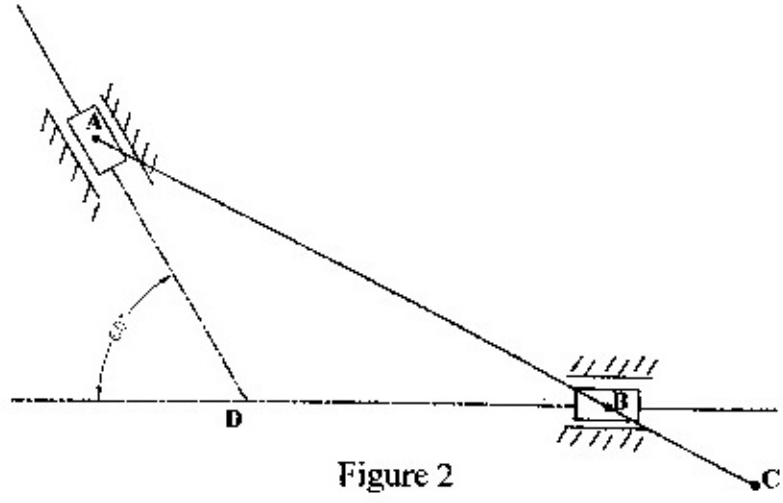

Figure 2

CANON canon 0000000000

UNIVERSITY O TECHNOLOGY
MECHANICAL ENGIN ERING DEPARTMENT
Supplementar Examination

Subject: *Theory of machines*
Class: *3rd year Mechanical Eng. (Al*

Date: */ /2011*
Time: *3 hrs*

Q1: For locomotive (قاطرة) linkage shown in Figure 1, determine the velocities of points A, R, and S for a locomotive speed of 27 m/s. Calculate ω_2 and ω_3. b) Determine the acceleration of points A for a locomotive speed of 27 m/s.

Q2: In Figure 2, the uniform steel bar is in motion and the accelerations of points A and B are as shown. Determine the magnitude and direction of the resultant inertia force.

Q3: Four pulleys A, B, C, D, are mounted on a shaft and have the following specifications:

Pulley	Mass (kg)	R (mm)
A	500	7.5
B	650	8 at 30° to A
C	650	8 at 90° to A
D	500	5.5 at 150° to A

This shaft is carried in bearings at E and F, the pulleys and bearings being situated so that the axial distances along the shaft are AB = +0.6 m, AC = +0.9 m, AD = +1.5 m, AE = +0.3 m, AF = +1.2 m.

If the system rotates at 300 rpm, determine the magnitude of the bearing reactions arising from the absence of balance, and the direction of these reactions relative to the out-of balance force from pulley A.

Q4: Determine the speed and direction of rotation of F and G in Figure 3. Assuming that all teeth are of the same module.

Q5: Lay out the displacement diagram for a cam follower that is to have the following motion.

- Rise 50 mm in 120° (uniform acceleration motion).
- Dwell 30°.
- Fall 50 mm in 210° SHM.

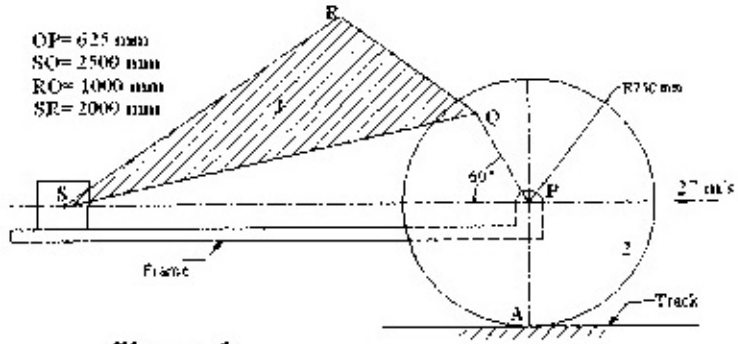

Figure 1

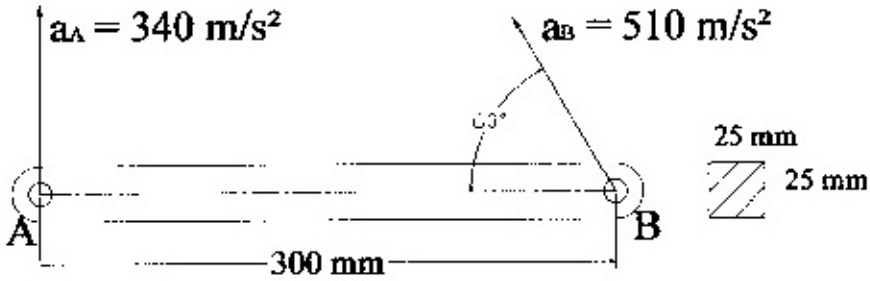

Figure 2

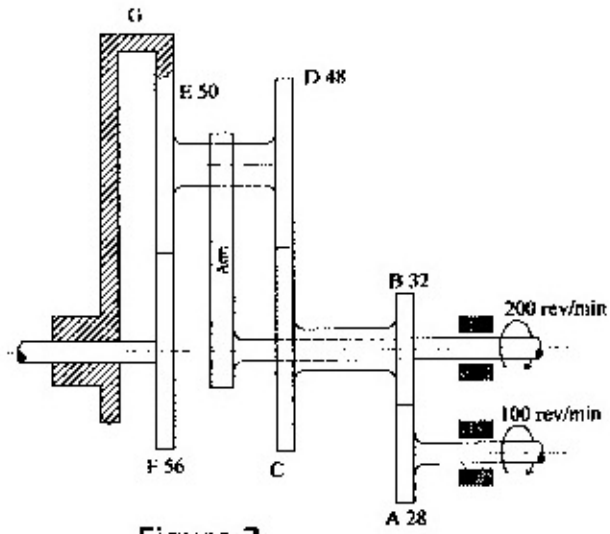

Figure 3

CANON Canon 0000001

UNIVERSITY OF TECHNOLOGY
MECHANICAL ENGINEERING DEPARTMENT
Supplementary Examination

Subject: Theory of Machines, 3rd year — Date: 18 /09/2011
Examiner(s): Dr. Hassan , Dr. Nabil N. S. — Time: 3 hrs

Q1: a) In the slider-crank mechanism shown in Figure 1, the crank rotates at a uniform angular velocity of 10 rad/s cw. For the configuration shown, determine the magnitudes and directions of ω_3, V_B, $V_{B/A}$, α_3, $a_{B/A}$ and a_B. Take: $O_2A = 76$ mm and $AB = 203$ mm.

b) In Figure 2, link 2 rotates about the fixed axis at O_2. Determine all forces that produce the motion of the link. Take: $M_2 = 8$ kg, $I_{G2} = 0.02$ kg m^2.

Q2: Figure 3 shows three masses connected to a rotating shaft and mounted outside of the bearings A and B. If the shaft rotates at 150 rpm, using the balancing of rotating masses method, determine the magnitudes and directions of the bearing reactions at A and B. Assuming that M_1 is vertical and above the shaft and the angles of M_2 and M_3 are 125° and 210° respectively ccw relative to M_1.

Q3: Figure 4 shows a gear train in which gears D-E and F-G are compound gears. D gears with A and B; E gears with C. If the wheel A is fixed and the arm makes 20 rpm cw, find the revolutions of B and C.
If the arm is applied a turning moment of 1 kN.m, determine the turning moment on the shaft supporting the wheel C.

Answer only one of the following:

Q4: Two involute gears in a mesh have a module of 6 mm and a pressure angle of 20°. The larger gear has 56 teeth and the gear ratio is 1/2. If the addenda on pinion and gear wheels are equal to one module, find the

i) Angle of action of the pinion and the gear wheel
ii) Maximum sliding velocity when the pinion rotates at 130 rpm

Q5: Power is transmitted between two shafts, 5 m apart, by an crossed wire rope passing round two pulleys, of 3 m and 2 m diameter respectively, the groove angle being 40°. If the rope has a mass of 4 kg/m, and the maximum working tension is 20 kN, determine the maximum power that the rope can transmit, and the corresponding speed of the smaller pulley. $\mu = 0.3$.

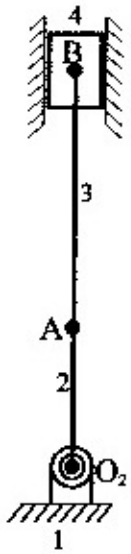

Figure 1

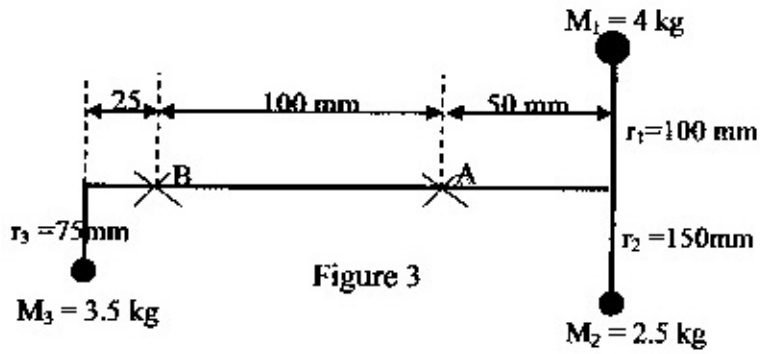

Figure 3

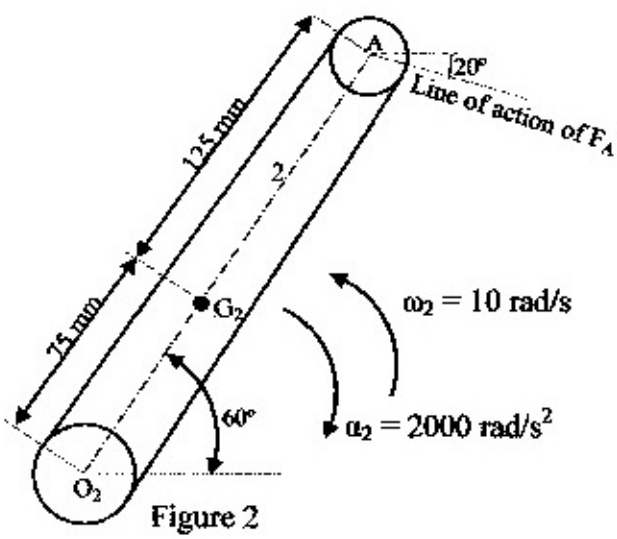

Figure 2

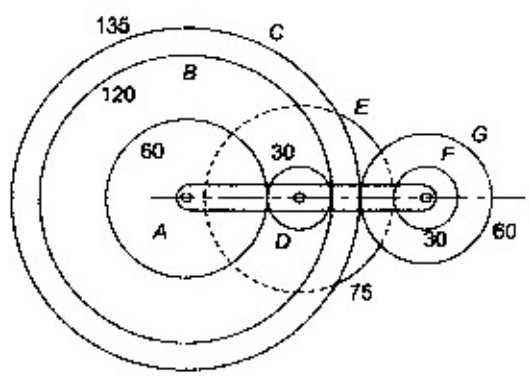

Figure 4

CANON canon 00000009

UNIVERSITY OF TECHNOLOGY
MECHANICAL ENGINEERING DEPARTMENT
Final Examination

(Answer only five questions)

Subject: *Theory of machines*
Class: *3rd year Mechanical Eng. (All)*

Date: *10/6/2007*
Time: *3 hrs*
Dr. *NABIL NOOR*

Q1: In the mechanism shown in Figure 1, the crank AB rotates in ccw direction at a uniform speed of 240 rpm. The crank length AB is 100 mm while the lengths of BC and BD are respectively 400 mm and 500 mm. Determine, for the position shown, the instantaneous difference in the velocity of C as compared with that of D and the instantaneous difference in the acceleration of C as compared with that of D.

(15 marks)

Q2: In the link ABC in Figure 2, AB = 600 mm, BC = 225 mm. A and B are attached by pin joints to the sliding blocks. If, for the position where BD = 375 mm, A is sliding towards D with a velocity of 6 m/s and a retardation of 150 m/s^2, find the acceleration of C and the angular acceleration of the link.

(15 marks)

Q3: Two gears of 3 module and of 20° pressure angle, each having 100 teeth, are in mesh together. Determine the addendum length necessary if the contact ratio is to be 2.0. How much greater is the addendum length than that of a standard tooth of the same pitch?

(15 marks)

Q4: Construct the displacement diagram for the specifications given below, using 15° intervals along θ axis for all types of motion:

1. Rise 60 mm in 90° (cycloidal motion)
2. Dwell 30°
3. Fall 30 mm in 90° (modified uniform-velocity motion-arc method)
4. Dwell 30°
5. Fall 30 mm in 120° (SHM)

(15 marks)

Q5: Answer (a) or (b):

(a) A cone clutch is required to transmit 30 kW at 1200 rpm. The mean diameter of the bearing surface is 250 mm and the cone angle is 25°. Assuming $\mu = 0.3$ and a normal pressure of 140 kN/m^2, determine the axial width of the conical bearing surface and the axial load required. *(15 marks)*

(b) Power is transmitted from an electric motor to a machine tool by an open belt drive. The effective diameter of the pulley on the motor shaft is 150 mm while that on the machine tool is 200 mm with a center distance of 600 mm. If the motor speed is 1440 rpm and the maximum permissible belt tension is 900 N, then the maximum power transmissible is 6 kW.

It is required to increase the power to be 6.75 kW, using the same pulleys, center distance and motor speed. The belt is treated with a special preparation that increases its coefficient of friction by 10% of its existing value, and addition an idler pulley may be fitted. Determine:

i. the existing coefficient of friction
ii. the new angle of lap. *(15 marks)*

Q6: Four pulleys A, B, C, D, are mounted on a shaft and have the following specifications:

Pulley	Mass (kg)	R (mm)
A	500	7.5
B	750	6 at 30° to A
C	750	6 at 90° to A
D	500	4.5 at 150° to A

This shaft is carried in bearings at E and F, the pulleys and bearings being situated so that the axial distances along the shaft are AB = +0.6 m, AC = +0.9 m, AD = +1.5 m, AE = +0.3 m, AF = +1.2 m.

If the system rotates at 300 rpm, determine the magnitude of the bearing reactions arising from the lack of balance, and the direction of these reactions relative to the out-of balance force from pulley A.

(15 marks)

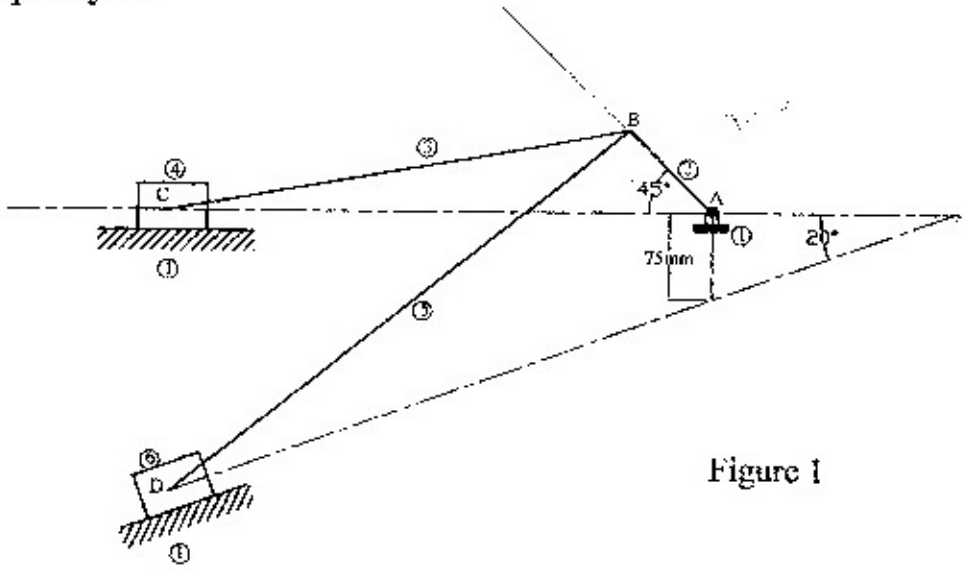

Figure 1

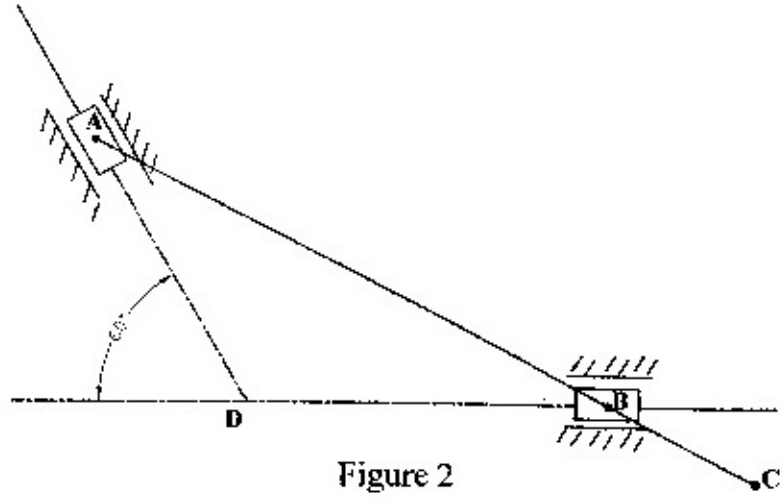

Figure 2

CANON canon 0000000000

UNIVERSITY O TECHNOLOGY
MECHANICAL ENGIN ERING DEPARTMENT
Supplementar Examination

Subject: *Theory of machines*
Class: *3rd year Mechanical Eng. (Al*

Date: */ /2011*
Time: *3 hrs*

Q1: For locomotive (قاطرة) linkage shown in Figure 1, determine the velocities of points A, R, and S for a locomotive speed of 27 m/s. Calculate ω_2 and ω_3. b) Determine the acceleration of points A for a locomotive speed of 27 m/s.

Q2: In Figure 2, the uniform steel bar is in motion and the accelerations of points A and B are as shown. Determine the magnitude and direction of the resultant inertia force.

Q3: Four pulleys A, B, C, D, are mounted on a shaft and have the following specifications:

Pulley	Mass (kg)	R (mm)
A	500	7.5
B	650	8 at 30° to A
C	650	8 at 90° to A
D	500	5.5 at 150° to A

This shaft is carried in bearings at E and F, the pulleys and bearings being situated so that the axial distances along the shaft are AB = +0.6 m, AC = +0.9 m, AD = +1.5 m, AE = +0.3 m, AF = +1.2 m.

If the system rotates at 300 rpm, determine the magnitude of the bearing reactions arising from the absence of balance, and the direction of these reactions relative to the out-of balance force from pulley A.

Q4: Determine the speed and direction of rotation of F and G in Figure 3. Assuming that all teeth are of the same module.

Q5: Lay out the displacement diagram for a cam follower that is to have the following motion.

- Rise 50 mm in 120° (uniform acceleration motion).
- Dwell 30°.
- Fall 50 mm in 210° SHM.

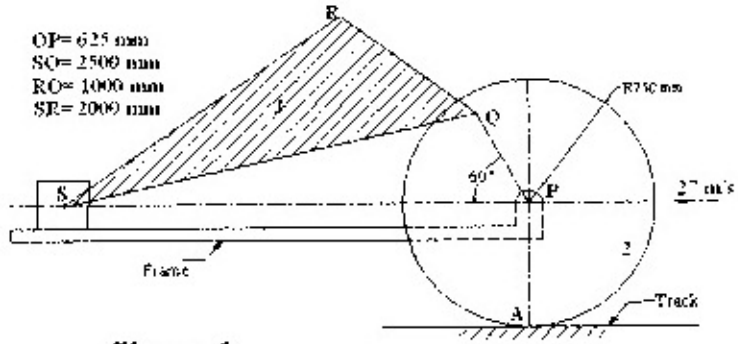

Figure 1

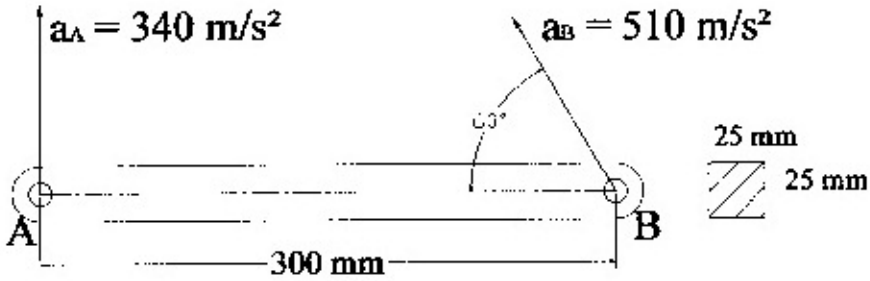

Figure 2

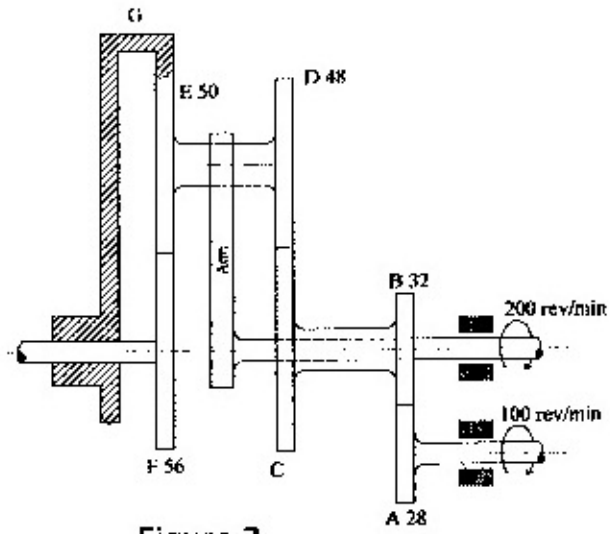

Figure 3