Composition and Resolution of Forces :-

تركيب وتحليل القوى

Composition :- Is the processes of replacing a force system by its resultant. The resultant of the two concurrent force ex) P & Q, Can be determined by means of the parallelogram (متوازي اضلاع) Law. (في حالة القوى غير متعامدة اي الزاوية $\neq 90^\circ$)

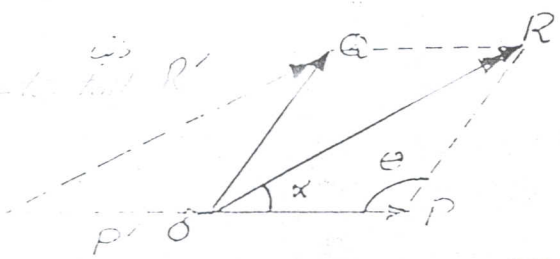

(يتكون هذا القانون على اكمال الشكل متوازي اضلاع)

$$R = [P^2 + Q^2 - 2 * P * Q * \cos\theta]^{\frac{1}{2}}$$

The value of α Can be determined as following :-

$$\frac{\sin\alpha}{Q} = \frac{\sin\theta}{R}$$

In Obtain rectangular Components, the parallelogram reduces to a rectangle. For ex)

(في حالة القوى متعامدة)

$$R = \sqrt{P^2 + Q^2}$$

$$\sin\alpha = \frac{Q}{R}$$

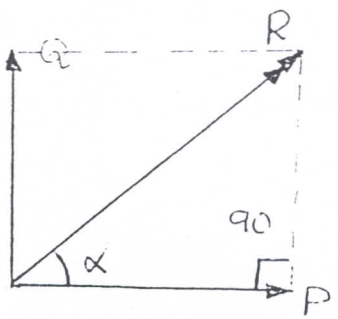

Resolution :- Is the processes of replacing a force by its components. (مركبات)

1) Resolving a force along **rectangular components** :-

القوة — المثلث

$F_x = Oa = F * \cos\theta$

$F_x = F * 4/5$ → through O

$F_y = OB = F * \sin\theta$

$F_y = F * 3/5$ ↑ through O

(في حالة كون القوى في مستوي واحد)

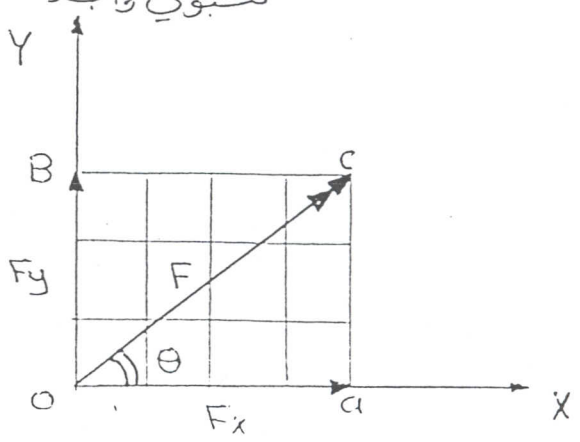

* For a force in Space (3 dimensional) the resolution is as following :-

(في حالة كون القوى في الفضاء)

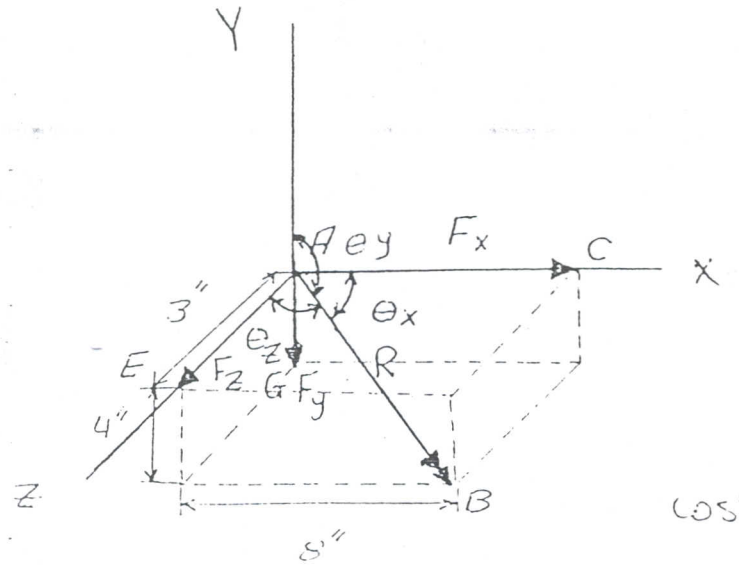

* في حالة الزاوية اكبر من 90° الـ cosine لها سالب .

$F_x = AC = R * \cos\theta_x$

$F_y = AG = R * \cos\theta_y$

$F_z = AE = R * \cos\theta_z$

* The angles θ_x, θ_y & θ_z are the angles between the resultant force and the positive coordinate axes. The cosines of these

ngles are called direction cosines. If the angles is greater han 90°, the cosine is negative.

3) Resolving a force along non-rectangular components:-
Several methods are available (في حالة كون المتوك غير متعامدة)

1) Graphically: by drawing the parallelogram to any convenient scale.

2) Algebraically: by using law of sines.

$$\frac{OA}{\sin B} = \frac{F}{\sin(180-\alpha-B)}$$

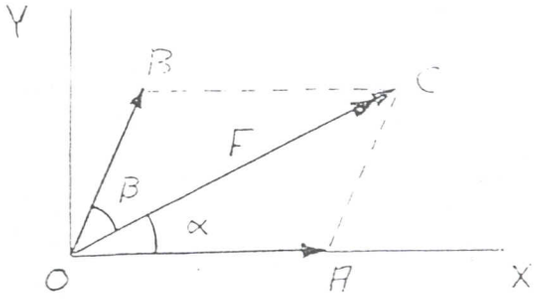

3) Resolve the force into rectangular components and equal each of the rectangular components of F to the sum of the rectangular compnents of OA and OB.

Ex) Resolve the 100 N force along OA and OB ?

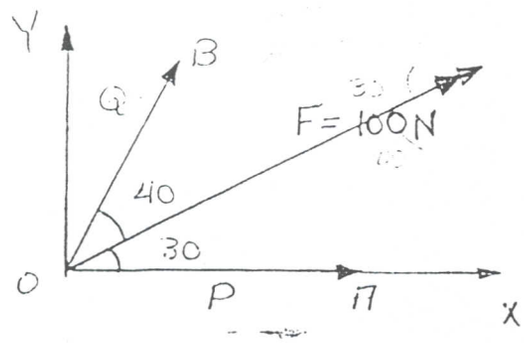

method 1:-

$$\frac{P}{\sin 30} = \frac{100}{\sin 110} \Rightarrow \therefore P = \frac{100 \times \sin 40}{\sin 110}$$

$$P = 100 * \frac{0.6427}{0.9397} = 68.4 \text{ N through O}$$

$$\frac{Q}{\sin 30} = \frac{100}{\sin 110} \Rightarrow Q = 100 * \frac{0.5}{0.9397} = 53.2 \text{ N } \angle 70 \text{ through O}$$

method 2 :-

$Fx = 100 * \cos 30 = 86.6$ N

$Fy = 100 * \sin 30 = 50$ N

$Qx = Q * \cos 70$

$Qy = Q * \sin 70$

$Fx = Qx + P$

$Fy = Qy + 0$

$50 = Qy \Rightarrow 50 = Q * \sin 70 \Rightarrow Q = 53.2$ N $\angle 70$ through O

$86.6 = 53.2 * \cos 70 + P \Rightarrow \therefore P = 68.4$ N $\longrightarrow$ through O

Moment of a Force

The moment of a force is a measure of its tendency to turn or rotate a body about the moment axis.

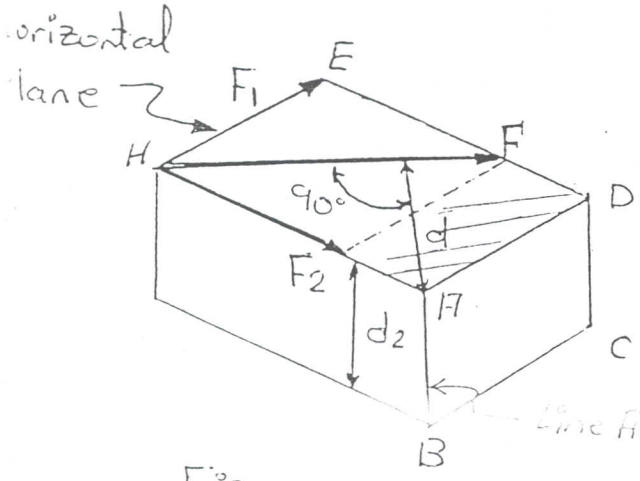

Fig. 2-1

In Fig. 2-1, the magnitude of the moment of the horizontal force F about (with respect to) the vertical line AB is the product (Fd), where d is the perpendicular distance from point A (the intersection of the line AB and the horizontal plane) to the force, the quantity (Fd) is often referred to as the moment of the force with the respect to point A.

If the force does not lie in a plane perpendicular to the moment axis, it may be resolved into two components, one being parallel to the moment axis and the other lying in a plane perpendicular to the axis.

To determine the moment of the force F in fig 2-1 with respect to the line BC, the force is resolved into components F_1 and F_2. The moment of F_1 with respect to BC is (zero) since [F_1 is parallel to BC]. The component [F_2 is in a plane which is perpendicular to BC], and its moment about BC is $(F_2 d_2)$.

To illustrate that :- a force parallel to an axis has no moment with respect to the axis, the shaft and pulley shown in Fig 2-2 the forces T_1 and T_2 tend to rotate the pulley on the shaft (ab), where as the force R, which is paralled to the shaft, tends to translate the pulley along the shaft(ab). which mean the moment of R with respect to ab is zero.

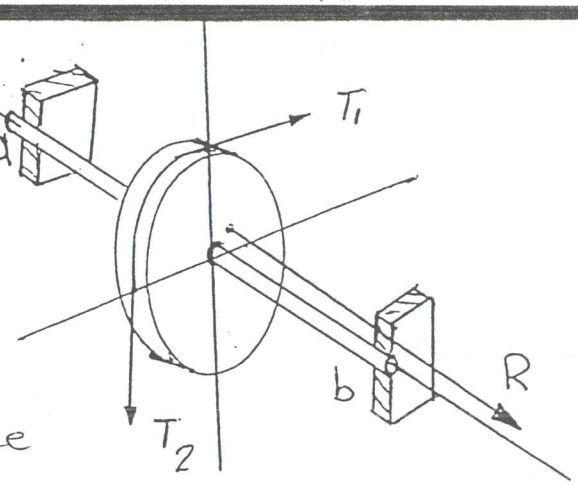

Fig. 2-2

Note :- The moment of a force acts either clockwise or counterclockwise about a particular moment axis; thus it is a vector quantity with a definite sense of rotation about a definite axis.

The sense of rotation is indicated by placing the arrowhead on the vector pointing in the direction a right-hand screw would advanced if turned in the direction of the sense of rotation of moment.

The moment of a force F with respect to a point A is defined as a vector with magnitude equal to the product of the perpendicular distance from A to F times the magnitude of F, with direction perpendicular to plane containing A and F.

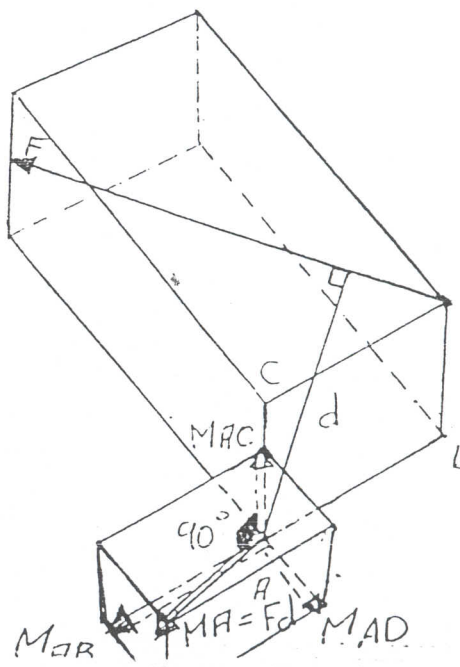

Fig 2-3

Note:- the moment M_A of Fig. 2-3 Can be resolved into rectangular components M_{AB}, M_{AC} and M_{AD}. These three rectangular components of the moment M_A are actually the moments of the force F about the lines AB, AC, and AD respectively.

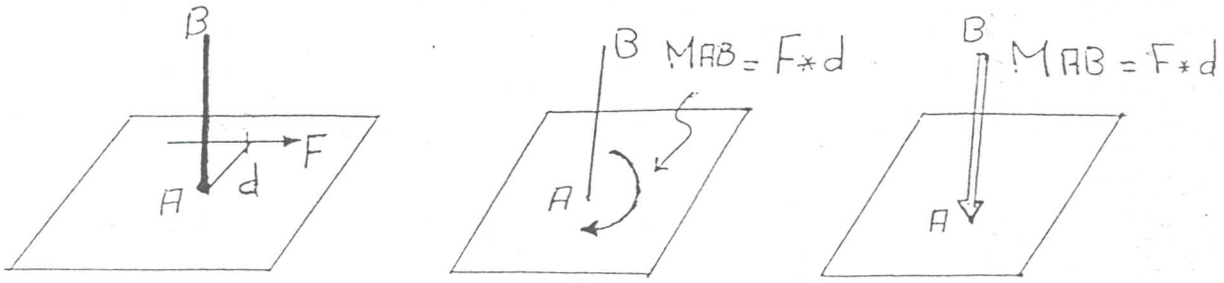

Principle of Moments of Forces

The principle of moments as applied to a force system states that the moment of the resultant of the force system with respect to any axis is equal to the algebric sum of the moments of the forces of the system with respect to the same axis.

The application of this principle to a pair of Concurrent force is known as "Varignon's theorem". Varignon's theorem may be demonstrated as follows: In Fig. 2-4

mom. of R = mom. of P + mom. of Q

$R_r = Q_q + P_p$

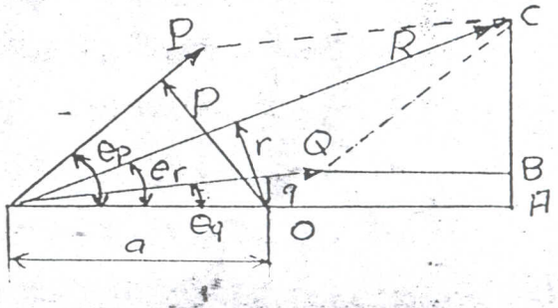

Ex) Determine the moment of the force F in Fig. with respect to the vertical line ab.

Solution:-

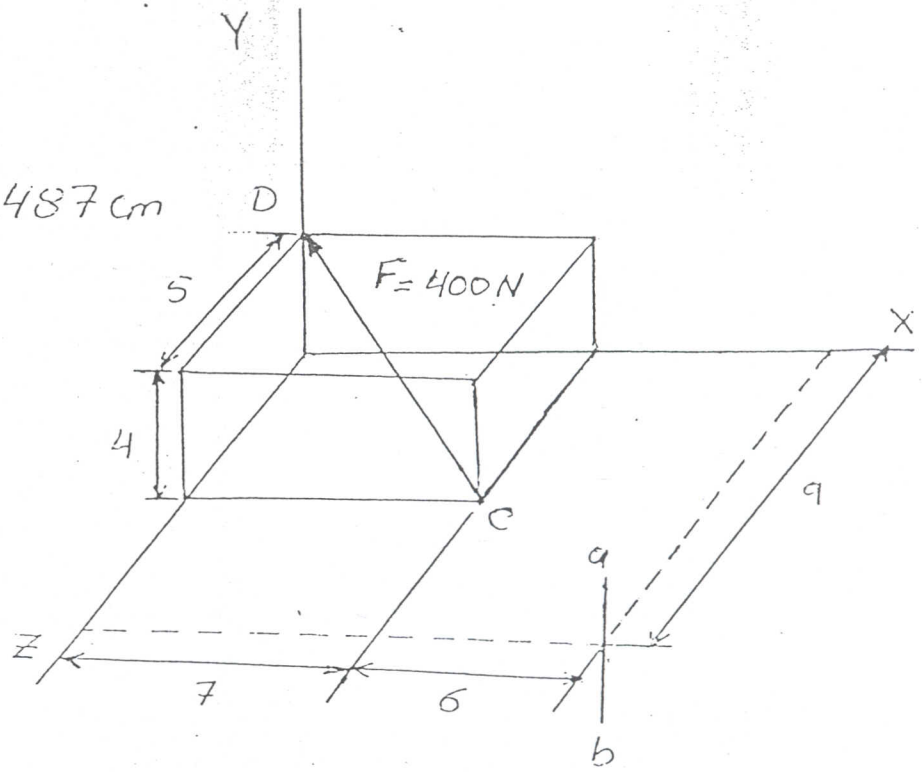

①

$CD = \sqrt{5^2 + 4^2 + 7^2} = 9.487\ cm$

The scale of F is

$\frac{400}{9.487} = 42.2\ N/cm$

$F_x = \overset{N/cm}{42.2} * \overset{cm}{7} = 295.4\ N$

$F_Y = 42.2 * 4 = 168.8\ N$

$F_Z = 42.2 * 5 = 211\ N$

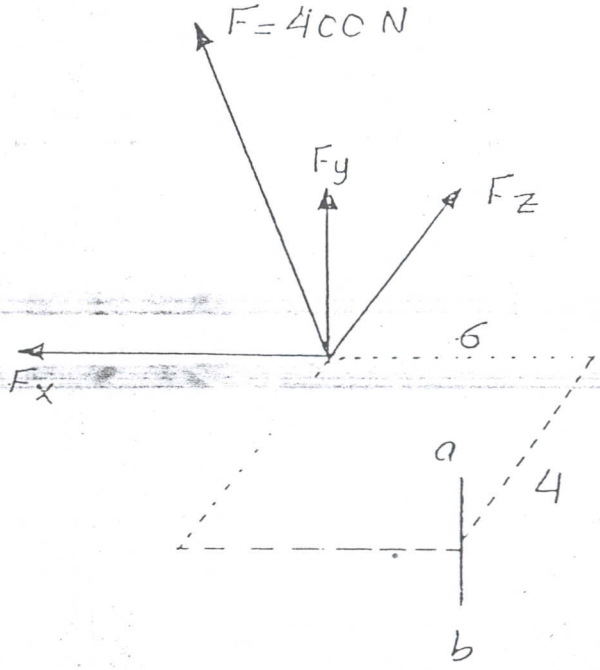

②

+ يفرض

$M @ a\text{-}b = F_Z * 6 - F_x * 4$

$= \overset{N}{211} * \overset{cm}{6} - 295.4 * 4$

$= +84.4$

$M_{ab} = 84.4\ N.cm$